Bid No. 2022-01-02

TOWNSHIP OF PISCATAWAY
MIDDLESEX COUNTY
NEW JERSEY

"2022- REHABILITATION OF VARIOUS PARKS COURT & RINKS"

TOWNSHIP OF PISCATAWAY

MAYOR
BRIAN WAHLER

PISCATAWAY TOWNSHIP COUNCIL
MICHELE LOMBARDI, COUNCIL PRESIDENT
FRANK UHRIN, COUNCIL VICE PRESIDENT
GABRIELLE CAHILL
JAMES BULLARD
STEVE D. CAHN
LINWOOD ROUSE
KAPIL K. SHAH

BUSINESS ADMINISTRATOR
TIMOTHY J. DACEY

TOWNSHIP CLERK
MELISSA A. SEADER

PROJECT MANAGER
HENRY HINTERSTEIN
LANDSCAPE ARCHITECT, ASSISTANT ZONING OFFICER
455 HOES LANE PISCATAWAY, NJ 08854

ANY QUESTIONS MUST BE E-MAILED TO Purchasing@piscatawaynj.org NO LATER THAN January 10, 2022. @ 12noon. PHONE CALLS WILL NOT BE ACCEPTED. THERE WILL BE NO EXCEPTIONS.

Bid Opening Date: Thursday, January 20, 2022 AT 2:00 PM

BIDDER: _____

ADDRESS: _____

_____

TEL. NO.: _____

EMAIL: _____

NOTICE TO BIDDERS

BID NO. 2022-01-02

TOWNSHIP OF PISCATAWAY
MIDDLESEX COUNTY, NEW JERSEY

NOTICE IS HEREBY GIVEN that sealed bids will be received by the Business Administrator or designated representative, for the Township of Piscataway, on **THURSDAY, JANUARY 20, 2022** at **2:00PM** prevailing time, in Council Chambers, Township of Piscataway, Administration Building, 455 Hoes Lane, Piscataway, NJ 08854 at which time and place bids will be publicly read by live broadcast via zoom as listed below. Bids will be publicly opened and reviewed for completeness for the following:

"2022-REHABILITATION OF VARIOUS PARK COURT & RINKS"

Bids must be made on standard proposal form, be enclosed in a sealed package bearing the name and address of bidder and the words **"2022-REHABILITATION OF VARIOUS PARK COURTS & RINKS" on** the outside and delivered to the Township Purchasing office only, 455 Hoes Lane, Piscataway, NJ 08854 during regular business hours, 8:30 am to 12:20 pm and 1:30 pm to 4:30 pm., Monday through Friday, excluding holidays. ***Please, be advised that the municipal building is closed daily between 12:20 PM and 1:30 PM for lunch.***

Bidders must call the purchasing office at 732-562-2321 to drop off the sealed bid By or Before 12 noon on 1/20/2022. **The** ***Municipal building is closed to the public due to the Covid-19. BID WILL BE OPEN VIA ZOOM AT 2:00PM***

SHOULD ANY ISSUES ARISE OBTAINING THIS BID PLEASE CALL PURCHASING @ 73-562-2321.

Bids Specifications, Plans and instructions to bidders may be obtained at: http://bids.piscataywaynj.org/

Question and Answer Due Date: January 10, 2022 by 12 Noon, E-mail only to: Purchasing@piscataywaynj.org

Addendum may be downloaded from the Township website http://bids.piscataywaynj.org/

During the Covid-19 pandemic, while the statewide "State of Emergency" declaration is still in effect in according with Executive Order 107 all proposal packets will only be read and opened electronically "BROADCAST LIVE" via ZOOM Bid opening. The Municipal building is closed due to the Covid-19 restrictions. Once the bid opening is concluded bidders must call the Purchasing Agent @ 732-562-2321 to set an appointment if bidders wishes to review any of the bids.

All bids shall be kept sealed , and will be received and publicly opened on the proposal opening date and time in the Township Council Chambers using Virtual teleconferencing which can be access by logging in to zoom in the following manner:

Join Zoom Meeting:
Piscataway Purchasing is inviting you to a scheduled Zoom meeting.
Topic: TOWNSHIP OF PISCATAWAY BID OPENING
Topic: 2022-REHABILITATION OF VARIOUS PARK COURTS & RINKS
Time: Jan 20, 2022 02:00 PM Eastern Time (US and Canada)
Join Zoom Meeting
https://us02web.zoom.us/j/83288824938?pwd=TnJUVVBMMU9ET3d4ajdxdGZSdXFMQT09
Meeting ID: 832 8882 4938
Passcode: 534306
One tap mobile
+13017158592,,83288824938#,,,,*534306# US (Washington DC)
+13126266799,,83288824938#,,,,*534306# US (Chicago)
Dial by your location
+1 646 876 9923 US (New York)
+1 301 715 8592 US (Washington DC)
+1 312 626 6799 US (Chicago)
+1 408 638 0968 US (San Jose)
+1 669 900 6833 US (San Jose)
+1 253 215 8782 US (Tacoma)
+1 346 248 7799 US (Houston)
Meeting ID: 832 8882 4938
Passcode: 534306

Bid Packet Marked "ORIGINAL" (1) Photo Copy of the Original "TRUE COPY"

Bids can be hand delivered to the Municipal Building by calling the Purchasing Agent Purchasing@732-562-2321. If using an outside delivery and/or messenger service (i.e. Federal Express, UPS, etc.), please note the following: **The Township <u>will not be responsible</u> for deliveries made prior to or after normal business hours, or to any other office, or <u>for</u> the failure of a bidder to affix the label <u>provided with the bid package on the courier envelope</u>.**

Surety in the form of a bid bond, certified check or Cashier's Check in the amount of ten percent (10%) of the total price bid, but not in excess of $20,000.00, payable unconditionally to the Township of Piscataway shall submit with the bid. The successful bidder will be required to furnish a Performance Bond in the Amount of 100% of total bid. Bidders shall comply with the requirements of N.J.S.A.10:5-31 and N.J.A.C. 17-27 et seq. Division of Purchasing

Bid NO: 2022-01-02

TOWNSHIP OF PISCATAWAY: "2022-REHABILITATION OF VARIOUS PARK COURTS & RINKS"

Bidder's Electronic Question Due Date: JANUARY 10, 2022 @12NOON

www.piscataywnj.org

PRE-BID Conference / Site Visit Date: N/A

Bid Submission Due Date: THURSDAY, JANAURY 20, 2022 - 2 PM

Bidders must call the purchasing office at 732-562-2321 to drop off the sealed bid... The ***Municipal building is closed to the public due to the Covid-19.***

PLEASE, DROP OFF YOUR SEALED BID BY OR BEFORE 1/20/2022 AT 12NOON.

BIDS WILL BE OPEN VIA ZOOM AT 2PM.

Bid Opening via ZOOM: Instructions below:

During the Covid-19 pandemic, while the statewide "State of Emergency" declaration is still in effect in according with Executive Order 107 all proposal packets will only be read and opened electronically "BROADCAST LIVE" via ZOOM Bid opening. The Municipal building is closed due to the Covid-19 restrictions. Once the bid opening is concluded bidders must call the Purchasing Agent @ 732-562-2321 to set an appointment if bidders wishes to review any of the bids.

All bids shall be kept sealed , and will be received and publicly opened on the proposal opening date and time in the Township Council Chambers using Virtual teleconferencing which can be access by logging in to zoom in the following manner:

Join Zoom Meeting:
Piscataway Purchasing is inviting you to a scheduled Zoom meeting.
Topic: TOWNSHIP OF PISCATAWAY BID OPENING
Topic: 2022-REHABILITATION OF VARIOUS PARK COURTS & RINKS
Time: Jan 20, 2022 02:00 PM Eastern Time (US and Canada)
Join Zoom Meeting
https://us02web.zoom.us/j/83288824938?pwd=TnJUVVBMMU9ET3d4ajdxdGZSdXFMQT09
Meeting ID: 832 8882 4938
Passcode: 534306

One tap mobile
+13017158592,,83288824938#,,,,*534306# US (Washington DC)
+13126266799,,83288824938#,,,,*534306# US (Chicago)
Dial by your location
+1 646 876 9923 US (New York)
+1 301 715 8592 US (Washington DC)
+1 312 626 6799 US (Chicago)
+1 408 638 0968 US (San Jose)
+1 669 900 6833 US (San Jose)
+1 253 215 8782 US (Tacoma)
+1 346 248 7799 US (Houston)
Meeting ID: 832 8882 4938
Passcode: 534306

REQUIRED: (1) Bid Packet Clearly Marked “ORIGINAL”, Documents all filled out & Signed in Blue Ink.
“
ONLY (1) ORIGINAL CERTIFIED BID BOND IS REQUIRED” IN THE ORIGINAL BID PACKET.

REQUIRED: (1) a Photo Copy of the Original Bid Clearly Marked “TRUE COPY”
No original documents in the true copy.

Bid No: 2022-01-02

THE TOWNSHIP OF PISCATAWAY

INSTRUCTIONS TO BIDDERS

PAGES 1-55

MARIA E. VALENTE-CAEMMERER

Purchasing Agent/Township Secretary

BID BOILER PLATE

PUBLIC WORKS

Revised June 2018

Piscataway

PUBLIC WORKS

Bid Specifications
&
General Requirements
For

2022-REHABILITATION OF VARIOUS PARK COURTS & RINKS

BID NO: 2022-01-02

Thursday, January 20, 2021
Bid Opening Date

2:00 p.m.
Bid Opening Time

Opening Location: 455 Hoes Lane
Piscataway, NJ 08854

MARIA E. VALENTE-CAEMMERER
Purchasing Agent/Township Secretary

The Township of Piscataway

REQUEST FOR BIDS
DIVISION OF PLANNING & ZONING

Bid Advertisement

The Township of Piscataway, New Jersey, hereby advertises for competitive bids in accordance with N.J.S.A. 40A:11 et seq., for

BID NO. 2022-01-02 "2022-REHABILITATION OF VARIOUS PARK COURTS & RINKS"

All necessary bid specifications and bid forms may be secured Township website at: http://bids.piscataywnj.org/.

Specifications and instructions to bidders may be obtained on the Township website http://bids.piscataywnj.org/. Bid documents will not be mailed. Bidders may contact the Purchasing office by E-mail only at: Purchasing@piscataywnj.org regarding questions or additional information about the bid specifications.

Bids must be submitted to: Township of Piscataway
Attention Purchasing Agent
455 Hoes Lane
Piscataway, NJ 08854
Division of Purchasing/Purchasing Agent
Township of Piscataway, NJ 08854
Phone: 732-562-2321
E-mail: purchasing@piscataywnj.org

Bids must be sealed and delivered to the Purchasing Office of the Piscataway Township ***on or before*** date and time indicated below. The envelope to bear the following information:

Title: **2022-REHABILITATION OF VARIOUS PARK COURTS & RINKS**
Bid No: **2022-01-02**
Name of the Bidder:
Address of the Bidder:
Date: **Thursday, January 20, 2022**
Time: **2:00 p.m. (BROADCAST LIVE VIA ZOOM)**

The bid opening process will begin on the above advertised date and time '**BROADCAST LIVE VIA ZOOM"** Administrative offices located at 455 Hoes Lane, Piscataway, NJ 08854. Bids may be submitted to the Purchasing office at the bid opening meeting, prior to the advertised date and time. On the advertised date and time, the Purchasing Agent shall publicly receive and open all bids. **LIVE BROADCAST VIA ZOOM**. ***No bids shall be received after the time designated in the advertisement***. (N.J.S.A. 40A:11-1 et. seq.,)The Township of Piscataway does not accept electronic (e-mail) submission of bids.
Bidders must call the purchasing office at 732-562-2321 to drop off the sealed bid. **The** ***Municipal building is closed to the public due to the Covid-19.***

During the Covid-19 pandemic, while the statewide "State of Emergency" declaration is still in effect in according with Executive Order 107 all proposal packets will only be read and opened electronically "BROADCAST LIVE" via ZOOM Bid opening. The Municipal building is closed due to the Covid-19 restrictions. Once the bid opening is concluded bidders must call the Purchasing Agent @ 732-562-2321 to set an appointment if bidders wishes to review any of the bids.

All bids shall be kept sealed , and will be received and publicly opened on the proposal opening date and time in the Township Council Chambers using Virtual teleconferencing which can be access by logging in to zoom in the following manner:

Join Zoom Meeting:

Topic: TOWNSHIP OF PISCATAWAY BID OPENING

Topic: 2022-REHABILITATION OF VARIOUS PARK COURTS & RINKS

Time: Jan 20, 2022 02:00 PM Eastern Time (US and Canada)

Join Zoom Meeting

https://us02web.zoom.us/j/83288824938?pwd=TnJUVVBMMU9ET3d4ajdxdGZSdXFMQT09

Meeting ID: 832 8882 4938

Passcode: 534306

One tap mobile

+13017158592,,83288824938#,,,,*534306# US (Washington DC)

+13126266799,,83288824938#,,,,*534306# US (Chicago)

Dial by your location

+1 646 876 9923 US (New York)

+1 301 715 8592 US (Washington DC)

+1 312 626 6799 US (Chicago)

+1 408 638 0968 US (San Jose)

+1 669 900 6833 US (San Jose)

+1 253 215 8782 US (Tacoma)

+1 346 248 7799 US (Houston)

Meeting ID: 832 8882 4938

Passcode: 534306

N/A

There will be a pre-bid meeting on_____. While attendance is not mandatory, all prospective bidders are strongly encouraged to attend this important meeting, **CONTRACTOR IS STRONGLY ENCOURAGE TO VISIT THE LOCATION OF THE PROJECT**.

All bidders are required to comply with the requirements of N.J.S.A. 10:5-31 et seq., Affirmative Action Against Discrimination (N.J.A.C. 17:27-1 et seq.) An Initial Project Workforce Report will be required from the successful contractor. (Form AA-201).

Statement of Ownership Requirement: Pursuant to N.J.S.A. 52:25-24.2, Bidders shall submit a statement setting forth the names and addresses of all persons and entities that own ten percent or more of its stock or interest of any type at all levels of ownership.

Each bid shall be accompanied by a bid bond, cashier's check or certified check made payable to the Township of Piscataway, for ten percent (10%) of the amount of the total bid, however, not to exceed $20,000.00.

Bidders are required by law to submit a Statement of Ownership Disclosure form statement setting forth the names and addresses of all persons and entities that own ten (10%) percent or more of its stock or interest of any type at all levels of ownership.

The bid package will also include other documents that must be completed and returned with the bid. Failure to comply with Instructions to Bidders and to complete and submit all required forms, may be cause for disqualification and rejection of the bid.

All contractors named in this proposal, shall possess a valid Public Works Contractor's Registration Certificate pursuant to N.J.S.A. 34:11-56.48 et seq., at the time the proposal is received by the Township of Piscataway. The Township of Piscataway reserves the right to reject any or all bids, pursuant to N.J.S.A. 40A:11-1 et. seq., and to waive any informalities that may be in the best interest of the Township.

MARIA E. VALENTE-CAEMMERER

_____

Purchasing Agent/Township Secretary

THE TOWNSHIP OF PISCATAWAY
HENRY HINTERSTEIN, LANDSCAPE ARCHITECT

REQUEST FOR BIDS
DIVISION OF PLANNING & ZONING

Bid Advertisement

The Township of Piscataway, New Jersey, hereby advertises for competitive bids in accordance with N.J.S.A. 40A:11 et seq., for

BID NO. 2022-01-02 "2022-REHABILITATION OF VARIOUS PARK COURTS & RINKS"

Bid Documents and Specifications, Plans may be obtain on the Piscataway website for free of charge. www.piscatawaynj.org ; Bid documents will not be mailed, and only picked up in person, at the above office location.

Bidders should also login to the Township website at: www.piscatawaynj.org for any Addendums: Home page E-Gov, Bids, download, print the document for free. Bidders may contact the Purchasing office by E-mail only at: Purchasing@piscatawaynj.org regarding questions or additional information about the bid specifications.

Bids must be sealed and delivered to the Purchasing office of Piscataway Township ***on or before*** date and time indicated below. The envelope to bear the following information:

Title: **2022-REHABILITATION OF VARIOUS PARK COURTS & RINKS**
BID NO: 2022-01-02
Name of Bidder:
Address of the Bidder:
Date: **THURSDAY, JANUARY 20, 2022**
Time: **2:00 p.m. (BROADCAST LIVE VIA ZOOM)**

The bid opening process will begin on the above advertised date and time '**BROADCAST LIVE VIA ZOOM"** Administrative offices located at 455 Hoes Lane, Piscataway, NJ 08854. Bids may be submitted to the Purchasing office at the bid opening meeting, prior to the advertised date and time. On the advertised date and time, the Purchasing Agent shall publicly receive and open all bids. **LIVE BROADCAST VIA ZOOM**. ***No bids shall be received after the time designated in the advertisement***. (N.J.S.A. 40A:11-1 et. seq.,)The Township of Piscataway does not accept electronic (e-mail) submission of bids.

Bidders must call the purchasing office at 732-562-2321 to drop off the sealed bid. **The** ***Municipal building is closed to the public due to the Covid-19. Please drop off your sealed by 12noon by or before 1/20/2022.***

During the Covid-19 pandemic, while the statewide "State of Emergency" declaration is still in effect in according with Executive Order 107 all proposal packets will only be read and opened electronically "BROADCAST LIVE" via ZOOM Bid opening. The Municipal building is closed due to the Covid-19 restrictions. Once the bid opening is concluded bidders must call the Purchasing Agent @ 732-562-2321 to set an appointment if bidders wishes to review any of the bids.

All bids shall be kept sealed , and will be received and publicly opened on the proposal opening date and time in the Township Council Chambers using Virtual teleconferencing which can be access by logging in to zoom in the following manner:

Join Zoom Meeting:

Piscataway Purchasing is inviting you to a scheduled Zoom meeting.
Topic: TOWNSHIP OF PISCATAWAY BID OPENING

Topic: 2022-REHABILITATION OF VARIOUS PARK COURTS & RINKS

Time: Jan 20, 2022 02:00 PM Eastern Time (US and Canada)

Join Zoom Meeting

https://us02web.zoom.us/j/83288824938?pwd=TnJUVVBMMU9ET3d4ajdxdGZSdXFMQT09

Meeting ID: 832 8882 4938

Passcode: 534306

One tap mobile

+13017158592,,83288824938#,,,,*534306# US (Washington DC)

+13126266799,,83288824938#,,,,*534306# US (Chicago)

Dial by your location

+1 646 876 9923 US (New York)

+1 301 715 8592 US (Washington DC)

+1 312 626 6799 US (Chicago)

+1 408 638 0968 US (San Jose)

+1 669 900 6833 US (San Jose)

+1 253 215 8782 US (Tacoma)

+1 346 248 7799 US (Houston)

Meeting ID: 832 8882 4938

Passcode: 534306

Here will be a pre-bid /**Site Visit** meeting on **N/A** While attendance is **not mandatory,** all prospective bidders are **Strongly Encouraged to VISIT THE PROJECT LOCATION**.

All bidders are required to comply with the requirements of N.J.S.A. 10:5-31 et seq., Affirmative Action Against Discrimination (N.J.A.C. 17:27-1 et seq.). An Initial Project Workforce Report will be required from the successful contractor. (Form AA-201).

Contractors bidding on this project are to comply with the requirements of the New Jersey Prevailing Wage Act pursuant to N.J.S.A. 34:11-56.25 et seq.

Each bid shall be accompanied by a bid bond, cashier's check or certified check made payable to the Township of Piscataway, for ten percent (10%) of the amount of the total bid, however, not to exceed $20,000.00.

Bidders are required by law to submit a Statement of Ownership Disclosure form statement setting forth the names and addresses of all persons and entities that own ten (10%) percent or more of its stock or interest of any type at all levels of ownership.

Statement of Ownership Requirement: Pursuant to N.J.S.A. 52:25-24.2, Bidders shall submit a statement setting forth the names and addresses of all persons and entities that own ten percent or more of its stock or interest of any type at all levels of ownership.

The bid package will also include other documents that must be completed and returned with 40A:11-1 et seq., the bid. Failure to comply with Instructions to Bidders and to complete and submit all required forms, may be cause for disqualification and rejection of the bid.

The Township of Piscataway reserves the right to reject any or all bids pursuant to N.J.S.A. 40A:11-1 et seq., and to waive any informalities that may be in the best interests of the Township.

MARIA E.VALENTE-CAEMMERER

Purchasing Agent/Township Secretary

TABLE OF CONTENTS

Review all sections that may affect your work and include applicable requirements. All contracts are based on scope information within the whole document set and are not limited to "trade" drawings and specifications.

	Section Title
	BID SPECIFICATIONS & GENERAL REQUIREMENTS
	Bid Advertisement
	Table of Contents Bidding Manual
	Ethics in Purchasing Statement to Vendors
	Advisory Information for Bidders
	1. Promptness of Bid Submittal
	2. Parking
	3. Mail
	4. UPS/FED EX
	5. Hand Deliver Bids – Suggested Practice
	Bid Checklist (A)
	Reminder Checklist (B)
	Return the entire original bid packet intact by the indicated deadline.
	GENERAL SPECIFICATIONS (for Bidding)
1, 2	***Instructions to Bidders***
3	Bid Opening
4	Affirmative Action Requirements
5	American Goods
6	Americans with Disabilities Act; Facilities for Handicapped Persons
7	Hold Harmless form
8	Anti-Discrimination Provisions—N.J.S.A. 10:2-1
9	Architect or Construction Contract Disputes; Alternate Dispute Resolution Process
10	Bid Guarantee and Bonding Requirements
11	Bid Proposal Form
12	Bidder Comment Sheet
13	Bidder's Responsibility for Bid Submittal
14	Business Registration Certificate
15	Challenges to Bid Specifications
16	Change Orders
17	Contracts
18	Contractor's Registration Evidence
19	Contractor/Vendor Requirements—Office of the New Jersey State Comptroller
20	Criminal History Background Checks N/A
21	Debarment, Suspension, or Disqualification
22	Documents, Missing/Illegible
23	Document Signature- Original; Blue Ink

Section Title	
24	Equipment Certification
25	Examination of Specifications, Acknowledgement
26	False Material Representation
27	Force Majeure
28	Insurance and Indemnity
29	Interpretations and Addenda
30	Iran Disclosure of Investment Activities
31	Liability - Copyright
32	Liquidated Damages
33	Maintenance Bonds
34	Non-Collusion Affidavit
35	Notice (Authorization) to Proceed
36	Payments
37	Payment, Partial, Withholding and Prompt
38	Performance Review
39	Exhibit “A” Exhibit “B”
40	Pre-Bid Meeting; Attendance Strongly Encouraged
41	Pre-Qualification of Bidders-N/A
42	Prevailing Wages: Construction, Alterations, Repairs
43	Qualification of Bidders
44	Resident Citizens; Preferred in Employment on Public Works Contracts
45	Renewal of Contract
46	Right to Know Law
47	Statement of Ownership Disclosure
48	Subcontracting Disclosure Statement
49	Subcontracting: Prohibitions: Hold Harmless
50	Sworn Contractor Certification; Qualifications and Credentials
51	Taxes; Contractor’s Use of Tax ID Number
52	Termination of Contract
53	Withdrawal of Bids

SUPPLEMENTAL SPECIFICATIONS:

- Award of Contract
- Experience
- Number of Working Days- AS PER SPECIFICATIONS
- Pre-Bid Meeting
- Pre-construction meeting- schedule by project manager after award
- Trade Classification

TECHNICAL SPECIFICATIONS
BID DOCUMENTS AND REQUIRED DOCUMENTATION
Acknowledgement of Addenda
Bidder's Comment Form
Contractor Questionnaire/Certification
Contractor's Registration Certification
Equipment Certification
Iran Disclosure of Investment Activities
Non-Collusion Affidavit
Pre-Qualification Affidavit—No Material Adverse Change-n/a
Prevailing Wages Certification
Statement of Ownership Disclosure Form
Pay to Play Form
Piscataway Bid Bond Form
Subcontractor's Disclosure Statement
1. Plumbing and Gas Fitting Work
2. Refrigeration, Heating & Ventilation Systems & Equipment
3. Electrical Work; Tele-Data, Fire Alarm or Security Systems
4. Structural Steel & Iron Work
5. Other Trades
Sworn Contractor Certification; Qualifications and Credentials
Appendix A -- Americans with Disabilities Act of 1990
Exhibit B –Mandatory Language Equal Employment Opportunity
AA201 Instructions for Completing the Initial Project Workforce Report
Appendix Section Model Performance Bond – *Sample* Surety Disclosure Statement and Certification – *Sample* Piscataway Performance Bond Form only- Sample
Sample of Certificate Of Employee Information Report
Sample of Sate of New Jersey Business Registration Certificate Sample of W-9 Sample of Certificate of Insurance Sample of Bid Bond Form Sample of Piscataway Performance Bond Form Sample of NJ Labor Payroll Forms Sample of NJ AA-202 Forms Sample of NJ AA-201 Forms Sample of –ST-13 Form

Ethics in Purchasing

Township Responsibility

Recommendation of Purchases
It is the desire of The Township of Piscataway to have all employees and officials practice exemplary ethical behavior in the procurement of goods, materials, supplies, and services.

Officials and employees who recommend purchases shall not extend any favoritism to any vendor. Each recommended purchase should be based upon quality of the items, service, price, delivery, and other applicable factors in full compliance with N.J.S.A. 40A:11-1 et seq.,

Solicitation/Receipt of Gifts – Prohibited
Officials and employees are prohibited from soliciting and receiving funds, gifts, materials, goods, services, favors, and any other items of value from vendors doing business with The Township of Piscataway or anyone proposing to do business with the Township.

Vendor Responsibility

Offer of Gifts, Gratuities -- Prohibited
Any vendor doing business or proposing to do business with The Township of Piscataway, shall neither pay, offer to pay, either directly or indirectly, any fee, commission, or compensation, nor offer any gift, gratuity, or other thing of value of any kind to any official or employee of The Township of Piscataway or to any member of the official's or employee's immediate family.

Vendor Influence -- Prohibited
No vendor shall cause to influence or attempt to cause to influence, any official or employee of the Township of Piscataway, in any manner which might tend to impair the objectivity or independence of judgment of said official or employee.

Vendor Certification

Vendors or potential vendors will be asked to certify that no official or employee of The Township of Piscataway or immediate family members are directly or indirectly interested in this request or have any interest in any portions of profits thereof. The vendor participating in this request must be an independent vendor and not an official or employee of the Township.

MARIA E. VALENTE-CAEMMERER

_____

Purchasing Agent/Township Secretary

Township of Piscataway

ADVISORY INFORMATION FOR BIDDERS

1. PROMPTNESS OF BID SUBMITTAL

It is the responsibility of the bidder to ensure that their bid is presented in a sealed envelope and submitted to the Purchasing Office, prior to the advertised bid date and time. The advertised bid date and time for this bid is on **THURSDAY JANUARY 20, 2022@ 2:00pm.** No bids shall be received after the time designated in the bid advertisement. No extensions or exceptions will be made. The Purchasing Office is opened Monday through Friday from 8:30am – 4:30pm and closed for lunch from 12:20pm to 1:30pm. Once again, bids will not be received after the time designated in the advertisement. LIVE BROADCAST VIA ZOOM at 2pm.

Due TO COVIDE-19 the Municipal Building is Closed to the Public. The bids will be opened in the Municipal building LIVE BROADCAST VIA ZOOM .You must call the Purchasing Agent to accept your sealed bid @ the front door of the Municipal Building 732-562-2321.

PLEASE, MAKE SURE YOU DROP OFF YOUR SEALED BID BY 12NOON ON JANUARY 20, 2022.

2. PARKING: ***Allow enough time to locate a parking space.***

3. MAIL

Mail is brought to the Clerk's Offices in mailbags, approximately 11:30am each day. The mail is then sorted within the Township system, by departments. The Clerk's Office routinely receives its mail at approximately 11:30am.

4. UPS / FED EX / AND OTHER EXPRESS DELIVERY SERVICES

Deliveries of this type usually begin at 9:00 a.m. These items are brought only to the Clerk's Office. The Clerks Office then calls the various departments with a request to pick up their items. **REQUIRED: MAKE SURE YOU CLEARLY ADDRESS THE OUTSIDE OF THE FEDEX OR UPS PACKET WITH NAME OF BID AND CONTRACTOR NAME, ADDRESS. (A MUST)**

5. HAND DELIVER BIDS – SUGGESTED PRACTICE-**Due to Covid-19 please call 732-562-2321 and the Purchasing agent will meet you at the front door of the Municipal Building to accept all sealed bids.**

Keeping the aforementioned items in mind, the Township suggests that bidders arrange to hand deliver their bid to the Purchasing Office by or before 12noon. The Purchasing Agent before the advertised date and time. Please understand that bids arriving after the advertised bid date and time, for any reason, cannot be accepted, opened or considered.

Submission of Original Bid in BLUE INK and One Photo Copy of the Original Bid Marked "TRUE COPY"

All bids are to be submitted in duplicate; one (1) REQUIRED Original; one (1) REQUIRED "True copy" of the original.

****** **The sample pages are not required back with the bid. Sample pages is information to bidders once awarded.**

Township of Piscataway

BID CHECKLIST (A)

A. Bid packages must be submitted in duplicate on the proposed forms as provided, and in the manner designated. The Township of Piscataway will accept one original bid package and one copy of the bid package. Please include all items, organized as follows:

1. Addenda, Acknowledgement
2. Americans with Disabilities Act—Acknowledgement
   Bid Bond Form
3. Bid Proposal Form
4. Bid Guarantee (Bid Bond, Cashier's Check, or Certified Check)
5. Business Registration Certificate -- New Jersey—Submit with bid or prior to award of contract
6. Certificate (Consent) from Surety
7. Acceptable Bid Bond Forms
8. Contractor Questionnaire / Certification
9. Contractor's Registration Certification
10. Contractor Registration Certificate—Submit with bid or prior to award of contract
11. Equipment Certification
12. Iran Disclosure of Investment Activities
13. Non-Collusion Affidavit
14. Notice of Classification Form
15. Prequalification Affidavit—No Material Adverse Change-N/A
16. Prevailing Wages Certification
17. Statement of Ownership Disclosure
18. Subcontractor's Disclosure Statement and all required attachments for subcontractors.
19. Sworn Contractor Certification; Qualifications and Credentials
20. Bidder Comment Form - Optional
21. Bid Cover Page, with name ,address ,phone number, E-mail address **(REQUIRED)**
22. Hold Harmless Agreement
23. Subcontractor's forms if not applicable: WRITE **N/A** ON THE FORM AND SIGN BOTTOM OF FORM.

Failure to submit the above listed documents with the bid package may be cause for rejection of the entire bid for being non-responsive

THE TOWNSHIP OF PISCATAWAY

BID CHECKLIST (B)

B. Reminder Checklist

As a courtesy, the Office of the Purchasing Agent has prepared this reminder checklist to items pertaining to this bid. The checklist is not considered to be all-inclusive. Bidders are to read and become familiar with all instructions outlined in the bid package.

Item	Yes	No
1. Have you verified your pricing to ensure accuracy?		
2. Have you answered every question fully and accurately?		
3. Have you signed all your documents **(Blue Ink)**? No facsimile signature.		
4. Have you prepared all documents for submission?		
5. Did you make a copy of the bid package for your records?		
6. Did you make a duplicate copy of the original bid for the Township? Marked "True Copy"		
7. Did you submit a signed Bid Guarantee? Signed Consent of Surety?		
8. Did you correctly address the envelope, title of bid?		
9. Have you allowed ample time for the bid to reach the Clerk's Office? _____ 10. **REQUIRED**: Bid Cover Page: Name , Address, Phone Number, E-mail Address?		

THE TOWNSHIP OF PISCATAWAY

2022-REHABILITATION OF VARIOUS PARK COURTS & RINKS

GENERAL SPECIFICATIONS

MARIA E. VALENTE-CAEMMERER

Purchasing Agent/Township Secretary

THE TOWNSHIP OF PISCATAWAY

"2022-REHABILITATION OF VARIOUS PARK COURTS & RINKS"

INSTRUCTIONS TO BIDDERS

1. **BIDS ARE TO BE SUBMITTED TO:** _____

   Attention Purchasing Agent
   The Township of Piscataway
   455 Hoes Lane
   Piscataway, New Jersey 08854

   BY: **2:00 p.m.** PREVAILING TIME ON: **THURSDAY, JANUARY 20, 2021**

   by mail, delivery service or in person. Bids that are submitted are to be sealed and will be unsealed and announced at the bid opening meeting.

2. **Bid Packages to be submitted in Duplicate**. Bids must be placed in a *sealed* envelope/package marked as shown below on the front of the envelope/package. Bid packages must be submitted **in duplicate** on the proposed bid submittal forms as provided, and in the manner designated. The Township of Piscataway requires one original bid package, one duplicate copy of the bid package. The extra copies are necessary for processing of the bids. Bidders should also keep a complete copy of the bid packet, exactly as submitted.

OUTSIDE Envelope Label Information:

Township**:** **The Township of Piscataway**
Bid Number: **2022-01-02**
Project: **"2022-REHABILITATION OF VARIOUS PARK COURTS & RINKS"**

Bid Date: **THURSDAY, JANUARY 20, 2022**
Bid Time: **2:00pm VIA ZOOM**

Bidder: *Name of Company*
Address
City, State Zip

Failure to properly label the bid envelope may be cause for the rejection of the bid.

The Township of Piscataway does not accept electronic (E-mail) submission of bids.

3. BID OPENING MEETING

All bids will be publicly received and unsealed by the Purchasing Agent opened at the above address and read beginning at **2:00pm** on **THURSDAY, JANAURY 20, 2021** Bidders and/or their authorized agents, and the general public are invited to be present at the bid opening VIA ZOOM. It is the responsibility of each bidder to ensure that their bid is complete and presented to the Purchasing Agent prior to the advertised bid date and time. No bids shall be received or accepted by the Township of Piscataway after the advertised bid date and time. Bids must be submitted to the purchasing Agent by 12noon on 1/20/2022. **Bids will be Opened Via Zoom @2pm.**

BIDDING REQUIREMENTS

4. AFFIRMATIVE ACTION—EQUAL EMPLOYMENT OPPORTUNITY IN PUBLIC CONTRACTS--EEO

The construction contractor shall complete and submit an Initial Project Workforce Report, **Form AA-201** upon notification of award by the governing body. Proper completion and submission of this Report shall constitute evidence of the contractor's compliance with the regulations. Failure to submit this form may result in the contract being terminated. The contractor also agrees to submit a copy of the Monthly Project Workforce Report, **Form AA-202** once a month thereafter for the duration of the contract to the Department of Labor Workforce and Development and to The Township of Piscataway Public Agency Compliance Officer.

All bidders should familiarize themselves with N.J.S.A. 10:5-31 et seq. and N.J.A.C. 17:27-1.1 et seq. MANDATORY EQUAL EMPLOYMENT OPPORTUNITY LANGUAGE—EXHIBIT B. If awarded a contract, your company/firm will be required to comply with the above requirements.

All relevant questions should be related to:

Department of Treasury
Division of Purchase and Property
Contract Compliance and Audit Unit
EEO Monitoring Program—PO Box 206
Trenton, New Jersey 08625-0206
(609) 292-5473

5. AMERICAN GOODS

In accordance with N.J.S.A. 40A:11-1 et seq., only manufactured products of the United States, wherever available, and where possible are to be used with this project.

6. AMERICANS WITH DISABILITIES ACT; FACILITIES FOR HANDICAPPED PERSONS

The contractor must comply with all provisions of Title II of the Americans with Disabilities Act (ADA), P.L 101-336, in accordance with 42 U.S.C. S121.01 et seq. The Township of Piscataway further recognizes that all specifications for the construction, remodeling or renovation of any public building shall provide facilities for the physically handicapped.

It is further recommended that bidders are required to read the Americans with Disabilities language form that is included in these specifications. The form shall be signed to show agreement with the provisions of Title II of the Act and the provisions are to be made a part of the contract. The signed form shall be submitted with the bid proposal. The contractor is obligated to comply with the Act and to hold the owner harmless.

7. ANTI-DISCRIMINATION PROVISIONS—N.J.S.A. 10:2-1

N.J.S.A. 10:2-1. Antidiscrimination provisions. Every contract for or on behalf of the State or any county or municipality or other political subdivision of the State, or any agency of or authority created by any of the foregoing, for the construction, alteration or repair of any public building or public work or for the acquisition of materials, equipment, supplies or services shall contain provisions by which the contractor agrees that:

a. In the hiring of persons for the performance of work under this contract or any subcontract hereunder, or for the procurement, manufacture, assembling or furnishing of any such materials, equipment, supplies or services to be acquired under this contract, no contractor, nor any person acting on behalf of such contractor or subcontractor, shall, by reason of race, creed, color, national origin, ancestry, marital status, gender identity or expression, affectional or sexual orientation or sex, discriminate against any person who is qualified and available to perform the work to which the employment relates;

b. No contractor, subcontractor, nor any person on his behalf shall, in any manner, discriminate against or intimidate any employee engaged in the performance of work under this contract or any subcontract hereunder, or engaged in the procurement, manufacture, assembling or furnishing of any such materials, equipment, supplies or services to be acquired under such contract, on account of race, creed, color, national origin, ancestry, marital status, gender identity or expression, affectional or sexual orientation or sex;

c. There may be deducted from the amount payable to the contractor by the contracting public agency, under this contract, a penalty of $50.00 for each person for each calendar day during which such person is discriminated against or intimidated in violation of the provisions of the contract; and

d. This contract may be canceled or terminated by the contracting public agency, and all money due or to become due hereunder may be forfeited, for any violation of this section of the contract occurring after notice to the contractor from the contracting public agency of any prior violation of this section of the contract.

No provision in this section shall be construed to prevent the township from designating that a contract, subcontract or other means of procurement of goods, services, equipment or construction shall be

awarded to a small business enterprise, minority business enterprise or a women's business enterprise pursuant to P.L..).

8. ARCHITECT OR CONSTRUCTION DISPUTES; ALTERNATIVE DISPUTE RESOLUTION PROCESS

All disputes relating to construction contracts or relating to contracts for engineers or architects, surveyors, design or skilled services relating to construction contracts for prompt payment issues shall be submitted to the following Alternative Dispute Resolution process ("ADR"):

All disputes shall first be submitted to the architect of record, if there is one, for a determination. If thirty (30) days pass without a determination by the architect or a determination is made that does not resolve the dispute, then the claims shall be submitted for non-binding mediation by a single mediator.
The mediation shall be held where the project is located before a mediator who is mutually acceptable to the parties. The parties shall share the mediator's fees equally. If the dispute is submitted for mediation the neutral party involved must demonstrate knowledge of the Local Public Contracts Law.

Nothing shall prevent either party from seeking injunctive or declaratory relief in court at any time.
The alternative dispute resolution practices required by this section shall not apply to disputes concerning the bid solicitation process, or to the formation of contracts.

The Bidder further agrees to include a similar provision in all agreements with independent contracts and consultants retained for the project and to require all independent contractors to include similar mediation provisions in all agreements with subcontractors, suppliers or fabricators so retained, thereby providing for mediation as the primary method for dispute resolution between the parties to those agreements. The arbitration of claims is expressly excluded under this Contract.

If the parties cannot resolve their dispute through the mediation process, the parties are free to file an action in the appropriate court of law.

9. BID GUARANTEE AND BONDING REQUIREMENTS

A. Bid Guarantee Bidders shall submit with their bid package a bid guarantee made payable to: The Township of Piscataway ("Township"). The guarantee shall be in the form of a certified check, cashier's check or bid bond in the amount of 10% of the bid, but not in excess of $20,000. Such deposit shall be forfeited upon refusal of a bidder to execute a contract. Any bid in the form of a check shall be returned when the contract is executed and surety (performance) bond filed with the Township.
The bid guarantee check for unsuccessful bidders, if requested, will be returned as soon after the bid opening as possible, but in no event later than (10) days after the bid opening.

Please note: *Uncertified business checks, personal checks or money orders are not acceptable*.

All bid bonds submitted must be signed and witnessed with original signatures. The Township will not accept facsimile or rubber stamp signatures on the bid bond**. Failure to sign the bid bond by either the Surety or Principal, and/or failure to submit the properly executed bid bond with the bid package, shall be deemed cause for disqualification and rejection of the bid.**

The Attorney-in-Fact who executes the bond on behalf of the surety shall affix to the bond a certified and current copy of the Power of Attorney. The Township of Piscataway will only accept bid bonds from companies that are licensed and qualified to do business in the State of New Jersey. Such a list may be available upon request to the State of New Jersey, Department of Banking and Insurance, P.O. 040, Trenton, New Jersey 08625. **Failure to submit a properly executed bid guarantee shall be cause for disqualification and rejection of bid.**

Please note: The name, address and phone number of the Bond Underwriter as well as the Bond Number shall be included with all bonds submitted to the Township.

****Acceptable Only the Township of Piscataway form. Bidders must use Township BID BOND Form in the bid.**

B. Certificate (Consent) of Surety—N.J.S.A. 40A:11-1 et seq.,

Each bidder must submit with his bid a certificate from a surety company stating that the surety company will provide the contractor with a performance bond in an amount equal to the amount of the contract (N.J.S.A. 40A-11-1 et seq.,). Such surety company must be licensed and qualified to do business in the State of New Jersey. All certificate (consent) of surety documents must be signed with original signatures.

The Township will not accept facsimile or rubberstamp signatures. The certificate (consent) of surety, together with a power of attorney must be submitted with the bid. Submission of a Consent of Surety which contains any prior conditions upon the Surety's issuance of the required Bonds (other than the award of the contract) may be cause for rejection of the bid.

Failure to sign the Certificate (Consent) of Surety by either the Surety or Principal, and/or failure to submit the properly executed Certificate (Consent) of Surety with the bid package, shall be deemed cause for disqualification and rejection of the bid.

C. Performance Bond--(N.J.S.A. 2A:44-143/2A:44-147)

The successful contractor shall furnish a Performance, Payment and Completion Bond in a sum of at least one hundred percent (100%) of the total amount payable by the terms of his Contract. Such written guarantee shall be made payable to the Township of Piscataway and shall be in the form required by Statute. Attached to the performance bond shall be a Surety Disclosure Statement and Certification which shall be complete in all respects and duly acknowledged according to law. A model Surety Disclosure Statement and Certification is presented in the Appendix Section of this proposal.

Such bond shall further carry a stipulation that no advance, premature, excessive or delayed payments by the Township shall in any way affect the obligation of the Surety on its bond.

Such bond shall further stipulate that no payments made to the contractor, nor partial or entire use of occupancy of the work by the Township shall be an acceptance of any work or materials not in accordance with this Contract and the Surety shall be equally bound to the same extent as the Contractor.

It is expressly stipulated that the Surety for the Contractor on the project shall be obligated to make periodic inquiries of the Township at reasonable times, to determine whether its Principal has performed or was performing the Contract in accordance with all its terms and conditions, particularly in relation to the progress payments scheduled under said Contract with the Township.

In the event the Contractor defaults or fails to perform or finish the work prescribed under the Contract for any reason whatsoever, it shall become the unqualified obligation the Surety for the defaulting contractor to complete the Contract in accordance with its terms following receipt of notice from the Township of such default.

The Township shall only accept one payment and performance bond to cover this public works contract. The performance bond shall contain language as found in N.J.S.A. 2A:44-14. The bond form language is presented in the Appendix Section of this proposal.

Such Performance, Payment and Completion Bond shall be executed and delivered to The Township of Piscataway when so requested by the Notice to Proceed Letter or within ten (10) days after the award of contract.

The Township of Piscataway will only accept performance bonds from surety companies that are licensed and qualified to do business in the State of New Jersey, and if the amount of the bond is $850,000 but not more than $3.5 million, the surety shall hold a current certificate of authority, issued by the United States Secretary of the Treasury pursuant to 31 U.S.C. 9305. (N.J.S.A. 2A:44-143 (b))

Please note: The name, address, and phone number of the Bond Underwriter as well as the Bond Number shall be included with all bonds submitted to The Township of Piscataway and must be duly signed with original signatures.

When applicable, for multi-year contracts and for extension of contracts, the Performance Bond may be re-submitted each year on the contract anniversary date for one hundred per cent (100%) of the contract amount.

<u> Acceptable ONLY the Township of Piscataway Form. Bidders must use Township Performance Payment Bond Form in the bid. (-SAMPLE)</u>**

10. BID PROPOSAL FORM

All bids are to be written in by typewriter or ink in a legible manner on the official Bid Proposal Form. Any bid price showing any erasure or alteration must be initialed by the bidder in ink, at the right margin next to the altered entry. Failure to initial any erasure or alteration may be cause to disqualify that particular bid entry. If the disqualified entry is a required one, the entire bid may be subject to rejection, so please fill out all entries with care.

Business Organization
Each Bid Proposal Form must give the full business address, business phone, fax, e-mail, the contact person of the bidder, and be signed by an authorized representative as follows:

• Bids by partnerships must furnish the full names of all partners and must be signed in the partnership name by one of the members of the partnership or by an authorized representative, followed by the signature and designation of the person signing.

• Bids by corporations must be signed in the legal name of the corporation, followed by the name of the State in which incorporated and must contain the signature and designation of the president, secretary or other person authorized to bind the corporation in the matter.

• Bids by sole-proprietorship shall be signed by the proprietor.

• When requested, satisfactory evidence of the authority of the officer signing shall be furnished.

The Bid Proposal Form must be duly signed by the authorized representative of the company, at the end of the Bid Proposal Form. **Failure to sign in Blue Ink the Bid Proposal Form may be cause to disqualify the entire bid.** If the Bid Proposal Form contains more than one sheet, then bidders are requested to affix the company name and address on each intervening sheet between the front sheet and the signature sheet which already bear the company information.

The Township of Piscataway will not consider any bid on which there is any alteration to, or departure from, the bid specifications. Bidders are not to make any changes on the Bid Proposal Form, or qualify their bid with conditions differing from those defined in the contract documents. If bidders do make changes on the Bid Proposal Form, except as noted above for initialed clerical mistakes, it may be cause to disqualify that particular bid as non-responsive. (N.J.S.A. 40A:11-1 et seq.,)

The bidder also conveys by submitting a bid that the company he represents is financially solvent, experienced in and competent to perform the type of work so specified.

-.

BID RESULTS. Preliminary bid results you can E-mail purchasing@piscatawaynj.org generally within **24-36 hours after date and time of bid opening**

11. BIDDER COMMENT SHEET

This form is for the Bidder's use in offering voluntary alternates, or other comments intended to afford the Township information or opportunities to improve the quality of the project, without invalidating the bid proposal. It may *not* be used to take exception to specific conditions of the project defined in the contract documents which the Bidder does not like. The bid provided must be based upon the plans and specifications, and all contract conditions, as stated. If these documents or conditions contain some untenable item, or extremely expensive provision, for example, to which the Bidder wishes to raise objection, this must be done at the pre-bid meeting, or in writing to the Purchasing office at: Purchasing@piscataywaynj.org through the question process outlined in the Instructions to Bidders. Such inquiries will have response issued by addendum only, and the resulting decision circulated to all bidders of record.

12. BIDDER'S RESPONSIBILITY FOR BID SUBMITTAL

It is the responsibility of the bidder to ensure that their bid is presented to The Township of Piscataway and officially received before the advertised date and time of the bid. It is understood and agreed upon that any person in The Township of Piscataway will be absolved from responsibility for the premature opening of any bid not properly labeled and sealed. Failure to properly label the bid envelope may be cause for the rejection of the bid.

BID SUBMITTAL. Bids may be hand delivered or mailed per legal Notice by Bidders. In the case of mailed bids, the Township of Piscataway will **not** assume any responsibility for bids lost in transit at any time before bid opening. All bids received after the designated date and time will be returned unopened to the bidder.

13. <u>BUSINESS REGISTRATION CERTIFICATE</u> (N.J.S.A. 52:32-44**)**

Pursuant to N.J.S.A. 52:32-44 as amended, a contractor shall provide the contracting agency with the business registration of the contractor and that of any named subcontractor prior to the time a contract, purchase order, or other contracting document is awarded or authorized. At the sole option of the contracting agency, the requirement that a contractor provide proof of business registration may be fulfilled by the contractor providing the contracting agency sufficient information for the contracting agency to verify proof of registration of the contractor, or named subcontractors, through a computerized system maintained by the State.

Request of the Township
All bidders or companies providing responses for requested proposals, are **requested** to submit with their response package a copy of their "New Jersey Business Registration Certificate" as issued by the Department of Treasury of the State of New Jersey.

The Township reminds all respondents that failure to submit the New Jersey Business Registration Certificate prior to the award of contract will result in the rejection of the proposal.

A subcontractor named in a bid or other proposal made by a contractor to a contracting agency shall provide a copy of its business registration to any contractor who shall provide it to the contracting agency pursuant to the provisions of subsection b. of this section. No contract with a subcontractor shall be entered into by any contractor under any contract with a contracting agency unless the subcontractor first provides the contractor with proof of a valid business registration.

The contractor shall maintain and submit to the contracting agency a list of subcontractors and their addresses that may be updated from time to time during the course of the contract performance. A complete and accurate list shall be submitted before final payment is made for goods provided or services rendered or for construction of a construction project under the contract. A contracting agency shall not be responsible for a contractor's failure to comply with this subsection.

A contractor or a contractor with a subcontractor that has entered into a contract with a contracting agency, and each of their affiliates, shall collect and remit to the Director of the Division of Taxation in the Department of the Treasury the use tax due pursuant to the "Sales and Use Tax Act," P.L.1966, c.30 (C.54:32B-1 et seq.) on all their taxable sales of tangible personal property delivered into this State.

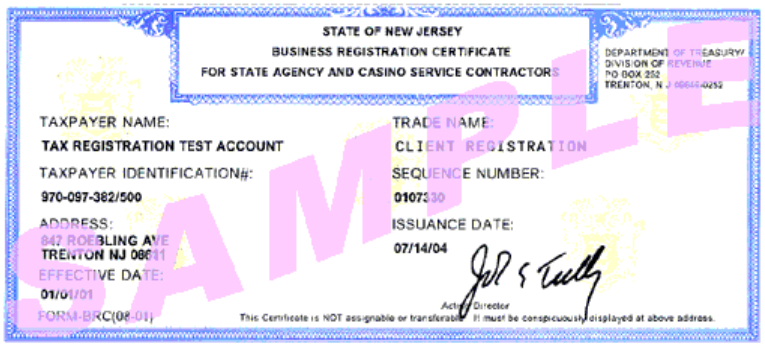

STATE OF NEW JERSEY
BUSINESS REGISTRATION CERTIFICATE
FOR STATE AGENCY AND CASINO SERVICE CONTRACTORS

DEPARTMENT OF TREASURY
DIVISION OF REVENUE
PO BOX 252
TRENTON, NJ 08646-0252

TAXPAYER NAME:
TAX REGISTRATION TEST ACCOUNT

TRADE NAME:
CLIENT REGISTRATION

TAXPAYER IDENTIFICATION#:
970-097-382/500

SEQUENCE NUMBER:
0107330

ADDRESS:
847 ROEBLING AVE
TRENTON NJ 08611

ISSUANCE DATE:
07/14/04

EFFECTIVE DATE:
01/01/01

Acting Director

FORM-BRC(08-01)

This Certificate is NOT assignable or transferable. It must be conspicuously displayed at above address.

SAMPLE

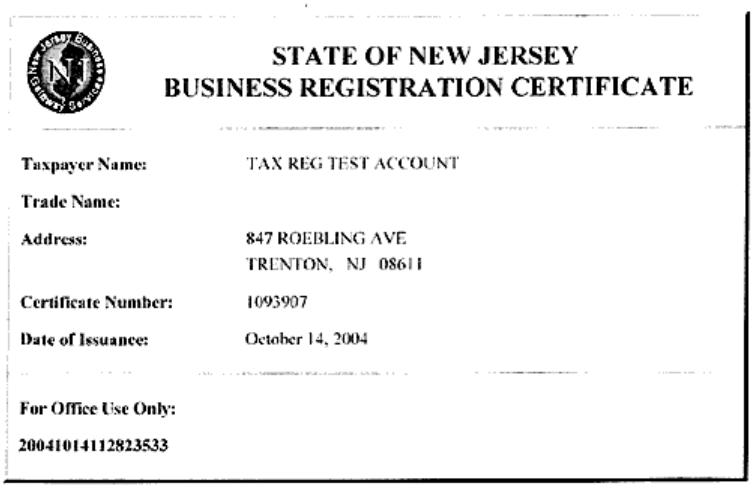

STATE OF NEW JERSEY
BUSINESS REGISTRATION CERTIFICATE

Taxpayer Name:	TAX REG TEST ACCOUNT
Trade Name:	
Address:	847 ROEBLING AVE TRENTON, NJ 08611
Certificate Number:	1093907
Date of Issuance:	October 14, 2004

For Office Use Only:

20041014112823533

SAMPLES OF NEW JERSEY BUSINESS REGISTRATION CERTIFICATES

N.J.S.A. 54:49-4.1: Violations of Registration Requirements; Penalties.

A business organization that fails to provide a copy of a business registration as required pursuant to section 1 of P.L.2001, c.134 (C.52:32-44 et al.) or subsection e. or f. of section 92 of P.L.1977, c.110 (C.5:12-92), or that provides false information of business registration under the requirements of either of those sections, shall be liable for a penalty of $25 for each day of violation, not to exceed $50,000 for each business registration copy not properly provided under a contract with a contracting agency or under a casino service industry enterprise contract.

14. <u>CHALLENGES TO BID SPECIFICATIONS</u> (N.J.S.A. 40A:11-1 et seq.,)

Any prospective bidder who wishes to challenge a bid specification shall file such challenges in writing with the Purchasing Agent no less than three (3) days prior to the opening of bids. Challenges filed after that date shall be considered void and having no impact on The Township of Piscataway or the award of a contract.

15. CHANGE ORDERS (N.J.A.C. 6A:26-4.9, 4.10 et seq.) (N.J.A.C. 5:30-11.1 et seq.)

The Township Approval Required; Prior to Issuance of Change Order (N.J.A.C. 5:30-11.2)

Change orders may be approved by The Township of Piscataway in an amount up to twenty percent (20%) when necessitated by one of the following:

- Emergencies consistent with N.J.S.A. 40A:11-1 et. Seq.;
- Unforeseeable physical conditions; or
- Minor modification to the project/scope that achieve cost savings, improve service or resolve construction conditions.

Contractors are prohibited to perform any change order unless so directed in writing by the Township, Office of the Purchasing Agent.

16. CONTRACTS

A. Award of Contract; Rejection of Bid

The contract shall be awarded, if at all, to the lowest responsible bidder as determined by the Township. The Township of Piscataway reserves the right to reject any or all bids as authorized by the Local Public Contracts Law, and to waive any informalities the Township feels are in the best interests of the Township.

Award the Contract or Reject All Bids--Sixty (60) Days

Pursuant to N.J.S.A. 40A:11-1 et seq., The Township of Piscataway shall award the contract or reject all bids within sixty (60) days of the advertised date and time, except that bids of any bidders who consent thereto may, at the request of the Township, be held in consideration for such longer period as may be agreed.

B. Equal Prices

Pursuant to the statute when two or more bidders submit equal prices and the prices are the lowest responsible bids, the Township may award the contract to the vendor whose response, in the discretion of the Township, is the most advantageous, price and other factors considered.

EQUAL OR TIE BID**.** The Township of Piscataway reserves the right to award at their discretion, in the best interest of the Township and with reference to the information submitted with the proposals, to any of the tie bidders.

UNIT PRICES**.** All unit prices, and all lump sum prices, in the bid proposal shall include all applicable fees, cost, and tax (if any) relating to project, and all charges for overhead, profit, insurance, etc. The successful bidder will not be responsible for real property tax on any property of the Owner, including the site of the project. Bid proposal amount will exclude all Federal Excise Tax and sales tax of all states, except those if any.

PRICING ERROR. If a pricing error is discovered after bid opening between the unit price and the total extended price, the unit price shall prevail.

RIGHTS RESERVED BY TOWNSHIP**.** The Township reserves the right to reject any and all bids, to waive any informalities or irregularities in the bids received, and to accept any bid which is deemed most favorable to the Township of Piscataway, New Jersey, at the time and under the conditions stipulated. Proposals incorporating deviations which, in the judgment of the Purchasing Agent, are a clear departure from the intent and purpose of these specifications will not be considered.

C. Return of Contracts and Related Contract Documents

Upon written notification of award of contract by the Township, the contractor shall sign and execute a formal contract agreement between the township and Contractor and return the executed contracts along with:

1. Performance Bond in the total amount of the contract.
2. Insurance Certificate with The Township of Piscataway named as an additional insured.
3. Affirmative Action Form AA-201 - Initial Project Workforce Report - Yellow copy.
4. Other required documents as may be outlined in bid specifications.

The above documents may also be required for submission with the official Notice to Proceed. The contracts and related documents shall be returned to the Office of the Purchasing Agent within **ten (10) days of receipt of notification**. Failure to execute the contract and return said contract and related required documents within the prescribed time may be cause for the annulment of award by the Township with the bid security becoming property of the Township.

D. Alterations of Contract

The Township of Piscataway reserves the right to alter or amend the contract by adding to or subtracting from the work herein specified, such additions or omissions being done under the general conditions of these specifications and the terms of the Contract. No changes shall be permitted from the specifications except that the same be in writing and the amount of the extra compensation or credit stipulated therein. Refer to Change Order Section.

E. Term of Contract

The contractor, to whom the contract is awarded, will be required to do and perform the work/services and to provide and furnish the materials in connection therewith in accordance with the plans and specifications on or before the date listed in the Technical Specifications.

TERM/COMPLETION OF PROJECT AS PER SPECIFICATION/PROPOSAL PAGES

F. Purchase Order Required

No contractor shall commence any public works project until he is in receipt of an approved purchase order authorizing work to begin. (See Notice (Authorization) to Proceed)

17. CONTRACTOR'S REGISTRATION EVIDENCE

A. Valid Certificate – Receipt of Bid

All contractors must adhere to the provisions of the Public Works Contractor Registration Act – N.J.S.A. 34:11-56.48 et seq. The PWCRA requires that "*No contractor shall bid on any contract for public work . . . unless the contractor is registered pursuant to this act.*" The law requires that all contractors and sub-contractors named in the proposal possess a valid certificate at the time the proposal is received by the contracting unit, in this case the Township.

B. Submission of Certificate – Receipt of Bid--Requested; Prior to Award--Mandatory

All bidders **are requested** to submit with the bid package a current Public Works Contractor Registration Certificate that was issued prior to the receipt of the bid.

The contractor who most likely is to be considered for the contract award, must submit a copy of the current Public Works Contractor Registration Certificate, and if applicable, copies of certifications of all listed subcontractors, prior to the award of contract**. If the successful contractor fails to provide copies of certificates prior to the award of contract, the bid may be rejected as non-responsive.**

For more information contact:

Contractor Registration Unit
Division of Wage and Hour Compliance
New Jersey Department of Labor & Workforce Development
PO Box 389
Trenton, New Jersey 08625-0389
Tel: 609-292-9464
Fax: 609-633-8591
E-mail: wage.hour@dol.nj.gov
Website: lwd.dol.state.nj.us/labor/wage hour/content/contact_us.html

18. CONTRACTOR/VENDOR REQUIREMENTS—OFFICE OF THE NEW JERSEY STATE COMPTROLLER

Contractors/vendors doing business with The Township of Piscataway are reminded of the following legal requirements pertaining to the Office of the New Jersey State Comptroller:

A. Access to Relevant Documents and Information—N.J.S.A. 52:15C-14 (d)

Private vendors or other persons contracting with or receiving funds from a unit in the Executive branch of State government, including an entity exercising executive branch authority, independent State authority, public institution of higher education, or unit of local government or the township shall upon request by the State Comptroller provide the State Comptroller with prompt access to all relevant documents and information as a condition of the contract and receipt of public monies. The State Comptroller shall not disclose any document or information to which access is provided that is confidential or proprietary. If the State Comptroller finds that any person receiving funds from a unit in the Executive branch of State government, including an entity exercising executive branch authority, independent State authority, public institution of higher education, or unit of local government or the township refuses to provide information upon the request of the State Comptroller, or otherwise impedes or fails to cooperate with any audit or performance review, the State Comptroller may recommend to the contracting unit that the person be subject to termination of their contract, or temporarily or permanently debarred from contracting with the contracting unit.

B. Maintenance of Contract Records—N.J.A.C. 17:44-2.2

Relevant records of private vendors or other persons entering into contracts with covered entities are subject to audit or review by OSC pursuant to N.J.S.A. 52:15C-14(d).

The contractor/vendor to whom a contract has been awarded, shall maintain all documentation related to products, transactions or services under this contract for a period of five years from the date of final payment. Such records shall be made available to the New Jersey Office of the State Comptroller upon request.

19. DEBARMENT, SUSPENSION, OR DISQUALIFICATION – (N.J.A.C. 17:19-1.1 et seq.)

The Township of Piscataway will not enter into a contract for work with any person, company or firm that is on the State Department of Labor and Workforce Development; Prevailing Wage Debarment List, or the State of New Jersey Consolidated Debarment Report (www.state.nj.us/treasury/debarred) or the Federal System for Award—SAM.gov.

All bidders are required to submit a sworn statement indicating whether or not the bidder is, at the time of the bid, included on the State Department of Labor and Workforce Development; Prevailing Wage Debarment List or the State of New Jersey Consolidated Debarment Report, or the Federal Debarred Vendor List--Excluded Parties List System, through the System for Award Management portal—SAM.gov.

20. DOCUMENTS, MISSING/ILLEGIBLE

The bidder shall familiarize himself with all forms provided by the Township that are to be returned with the bid. If there are any forms either missing or illegible, it is the responsibility of the bidder to contact the Purchasing Agent during regular business hours or the Director of Public Works as outlined in the bid advertisement for duplicate copies of the forms. This must be done before the bid date and time. The Township accepts no responsibility for duplicate forms that were not received by the bidder in time for the bidder to submit with his bid.

***Forms provided by The Township of Piscataway that must be returned with bid are referenced in the proceeding checklist.**

21. DOCUMENT SIGNATURES – ORIGINAL; BLUE INK

All documents returned to the Township shall be signed in ink (blue) with an original signature. Failure to sign and return all required documents with the bid package may be cause for disqualification and for the bid to be rejected pursuant to N.J.S.A 40A:11-1 et seq., (non-responsive). The Township will not accept facsimile or rubber stamp signatures.

Checklist of Required Documents (Forms Provided in Bid Package)

•	Acknowledgement of Addenda
•	Americans with Disabilities Act
•	Bid Proposal Form
•	Bidder Comments Form--optional
•	Bid Cover Sheet, Name, Address, Phone Number, E-mail Bid Bond Form
•	Contractor Questionnaire/Certification
•	Contractor's Registration Certification
•	Equipment Certification Exhibit "B" Hold Harmless Bidders Pay to Play form Plan & Experience
•	Iran Disclosure of Investment Activities
•	Non-Collusion Affidavit
•	Prequalification Affidavit –N/A
•	Prevailing Wages Certification
•	Statement of Ownership Disclosure
•	Subcontractor's Disclosure Statement
•	Sworn Contractor Certification; Qualifications and Credentials

Please check your bid package for these forms!

Reminder – Original Bid and One Copy of Bid Package

Bid packages are to be submitted in duplicate on the proposed forms as provided and the manner designated. The Township of Piscataway will accept one original bid package, one true copy of the bid package.

22. <u>EQUIPMENT CERTIFICATION</u> (N.J.S.A. 40A:11-1 et seq.,)

Each bidder shall provide a certification showing that he owns, leases or controls all the necessary equipment required by the specifications. If the bidder is not the actual owner or lessee of any such equipment, he shall submit a certificate stating the source from which the equipment will be obtained and shall obtain a certificate from the owner and person in control of the equipment, definitely granting to the bidder the control of the equipment required during such time as may be necessary for the completion of that portion of the contract for which it is necessary.

The certificates are to be submitted with the bid. If the contract involves the installation of a manufactured system which requires the contractor to have special knowledge or training, or to be specifically certified by the manufacturer to install their system, this form is used to submit such required evidence of the bidder's approval from the manufacturer.

23. <u>EXAMINATION OF SPECIFICATIONS, ACKNOWLEDGEMENT</u>

The bidder, by submitting a proposal, acknowledges that he has carefully examined the bid specifications, documents, addenda (if any), and the site; and that from his investigation, he has satisfied himself as to the nature and location of the work, the general and local conditions and all matters which may in any way affect the work or its performance, and that as a result of such examination, he fully understands the intent and purpose thereof, his obligations thereunder, and that he will not make any claim for, or have any right to damages, because of the lack of any information.
Each bidder submitting a bid for a service contract shall include in his bid price all labor, materials, equipment, services, and other requirements necessary, or incidental to, the completion of the work, and other pertinent work as hereinafter described, in accordance with the bid specifications and documents.

<u>TERM/COMPLETION OF PROJECT AS PER SPECIFCATIONS/PROPOSAL PAGES</u>

24. FALSE MATERIAL REPRESENTATION/TRUTH IN CONTRACTING

A person commits a crime if the person knowingly makes a material representation that is false in connection with the negotiation, award or performance of a government contract. If the contract amount is for $25,000.00 or above, the offender is guilty of a crime of the second degree. If the contract amount exceeds $2,500.00, but is less than $25,000.00, the offender is guilty of a crime of the third degree. If the contract amount is for $2,500.00 or less, the offender is guilty of a crime of the fourth degree.

Bidder should be aware of the following statutes that represent "Truth in Contracting" laws:

• N.J.S.A. 2C:21-34, et seq. governs false claims and representations by bidders. It is a serious crime for the bidder to knowingly submit a false claim and/or knowingly make material misrepresentation.

• N.J.S.A. 2C:27-10 provides that a person commits a crime if said person offers a benefit to a public servant for an official act performed or to be performed by a public servant, which is a violation of official duty.

• N.J.S.A. 2C:27-11 provides that a bidder commits a crime if said person, directly or indirectly, confers or agrees to confer any benefit not allowed by law to a public servant.

• Bidder should consult the statutes or legal counsel for further information.

25. FORCE MAJEURE

Neither party shall be liable in damages for any failure, hindrance or delay in the performance of any obligation under this Agreement if such delay, hindrance or failure to perform is caused by conditions beyond the control of either party, including, but not limited to, Acts of God, flood, fire, war or the public enemy, explosion, government regulations whether or not valid (including the denial or cancellation of any export or other necessary license), court order, state funding, or other unavoidable causes beyond the reasonable control of the party whose performance is affected which cannot be overcome by due diligence.

Vendors, and/or contractors who have a contract with The Township of Piscataway to provide goods or services cannot unilaterally claim an increase in the cost of the contract because of Force Majeure.

26. INSURANCE AND INDEMNIFICATION

The bidder to whom the contract is awarded for any service work or construction work shall secure, pay the premiums for and keep in force until the contract expires, insurance of the types and amounts listed as listed:

General Liability	$2,000,000. General Aggregate
	$1,000,000. Products
	$1,000,000. Bodily Injury Property Damage & Personal Injury Combined
	$1,000,000. Each Occurrence
	$ 100,000 Pollution Cleanup
	$ 50,000. Fire Damage
	$ 5,000. Medical Expense
Excess Umbrella Liability	$4,000,000
	$1,000,000 Sexual Harassment
Comprehensive Automobile Liability Coverage	$1,000,000 Combined Single Limit Bodily Injury/Property Damage

(A) Insurance Certificate – When Required

- The contractor shall present to The Township of Piscataway an insurance certificate in the above types and limits before any work or service begins.
- Automobile liability insurance coverage shall be included for any vehicle used by the contractor.
- The certificate holder shall be as follows:

The Township of Piscataway
c/o Office of the Purchasing Agent
455 Hoes Lane
Piscataway, New Jersey 08854

Additional Insured Clause-- The contractor must include the following clause on the insurance certificate.

"The Township of Piscataway is named as an additional insured"

OTHER INSURANCES

WORKERS COMPENSATION Evidence of adequate Workers Compensation Insurance as required by the laws of the State of New Jersey and the United States, must be available for perusal. The minimum limits are the following, unless a greater amount is required by law:

Bodily Injury by Accident	$1,000,000. Each Accident
Bodily Injury by Disease	$1,000,000. Policy Limit
Bodily Injury by Disease	$1,000,000. Each Employee
Contract Liability	Same as General Liability

(B) Indemnification

The contractor shall assume all risk of and responsibility for, and agrees to indemnify, defend, and save harmless the Township and its agents, employees and Township members, from and against any and all claims, demands, suits, actions, recoveries, judgments and costs and expenses (including, but not limited to, attorney's fees) in connection therewith on account of the loss of life or property or injury or damage to any person, body or property of any person or persons whatsoever, which shall arise from or result directly or indirectly from the work and/or materials supplied under this contract or the performance of services by the contractor under the agreement or by a party for the whole contract is liable. This indemnification obligation is not limited by, but is in addition to, the insurance obligations contained in this agreement.

The Contractor is to assume all liability of every sort incident to the work, including property damage caused by him or his men or by any subcontractor employed by him or any of the subcontractor's men.

(C) Builders Risk Applicable Not Applicable

The contractor shall obtain and pay for within their bid, a Builder's Risk Policy providing coverage for all risk of physical loss or damage to the property in an amount equal to the total project value, less excavations and foundations.

The policy must be maintained for the duration of the project from the beginning of construction until:

(i) written acceptance by Director of Public Works or substantial completion, and

(ii) a temporary certificate of occupancy or certificate of occupancy has been issued.

A copy of the policy must be delivered to The Township of Piscataway before construction begins. All of the contractor's policies, with the exception of workers' compensation, shall be endorsed naming the Township, its elected and appointed officials, and employees as additional insureds.

27. INTERPRETATIONS AND ADDENDA (N.J.S.A. 40A:11-1 et seq.,)

No interpretation of the meaning of the specifications will be made to any bidder orally. Every request

for such interpretations should be made in writing to the Purchasing Agent or the Architect/Engineer of Record and must be received by same at least ten (10) business days, not including Saturdays, Sundays and holidays, prior to the date fixed for the opening of bids to be given consideration. Any and all interpretations and any supplemental instructions will be distributed in the form of written addenda to the specifications. The addenda will be provided by The Township of Piscataway in accordance with N.J.S.A 40A:11-1 et. Seq. to the bidder by E-mail , certified fax or delivery service, no later than seven (7) days, not including Saturdays, Sundays, or holidays prior to the date for acceptance of the bids. All addenda so issued shall become part of the contract document.

ADDENDA. It shall be understood that any addendum issued from time to time to provide additional information to the bidders shall become an integral part of this bid package. Receipt of Addendum shall be acknowledged by the bidders in the space provided therefore on the "Bid Proposal Form: Bidders log into Township website for Addendums.

QUESTIONS REGARDING PLANS & SPECIFICATIONS. Should any bidder be in doubt as to the intent of the Plans and Specifications, he should immediately notify the Purchasing Agent in writing by E-mail to : Purchasing@piscatawaynj.org , who will send a written addendum to all bidders covering the point in question. Bidders may not rely upon oral before submitting bids, the bidder shall apply in writing to the Purchasing Agent for clarification or interpretation of any conflicting information between two or more statements in the Plans and Specifications. If such clarification is not requested seven business days before bidding, the bidder shall be responsible for doing such work and furnishing such materials, as is necessary to comply with whichever interpretation of the Plans and Specifications the Engineer may, during construction, judge to be proper. **Due Date: 01/10/2022.**

28. IRAN DISCLOSURE OF INVESTMENT ACITIVITIES- (N.J.S.A. 40A:11-1 et seq.,)

The Township of Piscataway, pursuant to N.J.S.A. 40A:11-1 et. Seq. shall implement and comply with Public Law 2012, c.25, Disclosure of Investment Activities in Iran—N.J.S.A. 52:32-55 et seq.

Pursuant to Public Law 2012, c. 25, any person or entity that submits a bid or proposal or otherwise proposes to enter into or renew a contract, must complete a certification attesting, under penalty of perjury, that neither the person or entity, nor any of its parents, subsidiaries, or affiliates, is identified on the Department of Treasury's Chapter 25 list as a person or entity engaging in investment activities in Iran.

The Chapter 25 list is found on the Divisions website

http://www.state.nj.us/treasury/purchase/pdf/Chapter25List.pdf.

If the Township determines that a person or entity has submitted a false certification concerning its engagement in investment activities in Iran under section 4 of P.L.2012, c.25 (C.52:32-58), the Township shall report to the New Jersey Attorney General the name of that person or entity, and the Attorney General shall determine whether to bring a civil action against the person to collect the penalty prescribed in paragraph (1) of subsection a. of section 5 of P.L.2012, c.25 (C.52:32-59).

In addition, bidders must provide a detailed, accurate and precise description of the activities of the bidding person/entity, or one of its parents, subsidiaries or affiliates, engaging in the investment activities in Iran outlined above by completing the boxes on the lower portion of the enclosed form.
The Township has provided within the specifications, a Disclosure of Investments Activities certification form for all persons or entities, that plan to submit a bid, respond to a proposal, or renew a contract with the Township, to complete, sign and submit with the proposal.

JANUARY 29, 2021 UPDATE IRAN INVESTMENTS DISCLOSURE DOCUMENT FOR BIDS DOCUMENTS

Subject: Iran Investment Disclosure Now Pre-Award

Effective January 29, 2021, P.L. 2021, c. 4 amends the law requiring vendor and contractor disclosure of investment activities in Iran. The law allows the Iran investment disclosure form to be submitted prior to contract award and at the time the contract is renewed rather than with the bid or RFP submission. Although the law refers to State contracts, it also applies to contracting units subject to the Local Public, Public School, and County College Contracts Laws because N.J.S.A. 40A:11-2.1; 18A:18A-49.4; and 18A:64A-25.43, respectively, require these contracting units to follow the Iran disclosure procedure for State contracts. Contracting units are encouraged to review the new law with legal counsel and revise their procurement forms as necessary.

Failure to complete, sign, certify and submit the Disclosure of Investment Activities in Iran form with the bid/proposal shall be cause for rejection of the proposal.

29. LIABILITY – COPYRIGHT

The contractor (vendor) shall hold and save the Township, its officials and employees, harmless from liability of any nature or kind for or on account of the use of any copyrighted or un-copyrighted composition, secret process, patented or unpatented invention, article or appliance furnished or used in the performance of his contract.

30. LIQUIDATED DAMAGES

The contractor agrees to substantially complete this public works project to the complete satisfaction of The Township of Piscataway by the stated contract completion date or within the number of working days so specified in the contract.

Failure to complete the project within the specified time frame or contract completion date shall lead to The Township of Piscataway assessing liquidated damages against the contractor in accordance with and pursuant to N.J.S.A. 40A:11-1 et. seq.

For each calendar day thereafter that the work included under this contract remains uncompleted in accordance with the provision of the contract or not completed to the satisfaction of the Township, the Township shall assess liquidated damages as follows:

Amount of Contract *Range of Amount*	Liquidated Damages
$ 20,000 and less than $ 50,000	$ 200.00 per calendar day
50,001 and less than $ 100,000	300.00 per calendar day
100,001 and less than $ 250,000	500.00 per calendar day
251,001 and less than $ 500,000	1,000.00 per calendar day
500,000 and less than $1,000,000	2,000.00 per calendar day
1,000,000 and over	2,500.00 per calendar day

The Township may assess liquidated damages by deducting the amount from monies which may due or become due to the contract.

The Township may also assess the contractor additional damages for costs the Township may incur because each day the project remains uncompleted. These costs include but are not limited to:

- Construction management fees
- Architect/engineer fees
- administrative costs
- Any inspector or inspectors necessarily employed by The Township of Piscataway on the work, for any number of days in excess of the number allowed in the specifications

The Township of Piscataway may also assess against all monies owed to the contractor, liquidated damages for the violation of any terms and conditions of the contract or agreement by the contractor or the failure to perform said contract or agreement in accordance with its terms and conditions or the terms or conditions of the "Local Public Contracts Law," in accordance with and pursuant to N.J.S.A. 40A:11-1 et seq.,

31. MAINTENANCE BONDS Not **Required** not Required When required by the Township, the contractor shall furnish a Maintenance Bond for the total sum of the contract price, indemnifying The Township of Piscataway against defects in construction for a period of **Two (2) years** after the completion of the work, general wear and tear excepted.

The condition of this obligation is such that if the successful contractor shall indemnify and hold harmless The Township of Piscataway from and against all losses, costs, damages and expenses, whatsoever, which the Township may suffer or compelled to pay by reason of the failure of the successful contractor to indemnify the Township against defects in construction for a period of **Two (2) years** after the completion of the work.

32. NON-COLLUSION AFFIDAVIT (N.J.S.A. 52:34-15)

A notarized Non-Collusion Affidavit shall be submitted with the bid/proposal. The bidder/respondent has to certify that he has not directly or indirectly, entered into any agreement, participated in any collusion, discussed any or all parts of this proposal with any potential bidders, or otherwise taken any action in restraint of free, competitive bidding in connection with the above named bid, and that all statements contained in said Proposal and in this affidavit are true and correct, and made with full knowledge that The Township of Piscataway relies upon the truth of the statements contained in said Proposal and in the statements contained in this affidavit in awarding the contract for the said bid.

The respondent has to further warrant that no person or selling agency has been employed or retained to solicit or secure such contract upon an agreement or understanding for a commission, percentage, brokerage or contingent fee, except bona fide employees of bona fide established commercial or selling agencies maintained by the respondent.

The Township of Piscataway has provided a Non-Collusion Affidavit form here within the specifications package. All respondents are to complete, sign, have the signature notarized and submit the form with the proposal response.

Failure to submit the Non-Collusion Affidavit with the proposal may be cause for the disqualification of the proposal.

33. NOTICE (AUTHORIZATION) TO PROCEED

The contractor shall not perform any work, or provide any services, materials, supplies until a Notice (Authorization) to Proceed is received from the Office of the Purchasing Agent

The Township of Piscataway only recognizes the receipt by the contractor of an approved signed purchase order as a Notice to Proceed. No word of mouth, phone, fax, e-mail, letter or other form of communication to proceed is a valid Notice to Proceed.

It is the intention of the Township to officially notify the Contractor, to whom the contract was awarded, through a Notice to Proceed letter issued by the Purchasing Agent. A purchase order will accompany the Notice to Proceed letter. The contractor shall submit certain documents to the Township as so requested in the Notice to Proceed letter.

34. PAYMENTS

Every effort will be made to pay vendors and contractors within thirty (30) to sixty (60) days provided The Township of Piscataway receives the appropriate documentation including but not limited to:

- Signed voucher by vendor
- Packing slips
- Invoices

Payment will be rendered upon completion of services or delivery of full order to the satisfaction of the Township, unless otherwise agreed to by written contract or mandated by State Law*. The Township may, at its discretion make partial payments.

All payments are subject to approval by The Township of Piscataway at a public meeting. Payment may be delayed from time to time depending on The Township of Piscataway meeting schedule.

35. PAYMENT, PARTIAL, WITHHOLDING

A. Contract Thresholds; Partial Payments/Withholding

1. Contracts – Less than $100,000 – Lump Sum Payment

   Public works contracts less than $100,000 shall be paid in one lump total sum, upon completion of the project and to the satisfaction of the Township

   Contracts – Exceeding $100,000 – Monthly Payments

   Public works contracts that exceed $100,000 shall be paid with partial payments on a monthly basis for work that was completed to the satisfaction of the Township.

3. Withholding of Monies – Percentage to be Withheld

   The Township of Piscataway shall withhold the following percentages of outstanding balances of monies owed to contractors:

   Balances Exceeding $500,000 -- Two (2%) Per Cent
   Balances Less than $500,000 -- Five (5%) Per Cent

   The amounts withheld shall be returned to the contracts upon fulfillment of the terms of the contract.

B. Prompt Payment

The Township of Piscataway will provide payment in accordance with the "Prompt Payment" law as codified in N.J.S.A. 2A:30A-1 et seq. All payments to contractors are subject to approval by The Township of Piscataway at a public meeting.

The Township of Piscataway generally holds its Agenda, and its Regular Public Meetings twice or more each month. It is at these meetings that The Township of Piscataway reviews payment of bills.

All bills submitted to the Township for approval and payment pursuant to N.J.S.A. 2A:30A-1 et seq. must comply with the following provisions. The "billing date" shall be the date that the contractor signs the certification on the voucher/purchase order that the work has been performed. These bills include all bills for improvements to real property and contracts for engineers, architects, surveyors, design or skilled services relating to construction work.

Bills that are required to be approved by an engineering or architecture firm (prior to submission to the Township for approval) for purposes of confirmation of successful completion of construction work, shall be approved or disapproved within twenty (20) days of submission of same to the architect or engineer. If bills are disapproved or monies withheld from payment, the notice of the reason for same shall be given within the same twenty (20) days to the contract.

The Township must approve payment of all bills. For the Township to consider a bill for approval it must be submitted to the Purchasing Agent at least two weeks prior to a scheduled/or re-scheduled Township meeting date. If the Township, or any agent or officer of the Township, determines that the bill is not approved then notice of the disapproval shall be sent to the contractor with five (5) days of the Township meeting on which the bill was listed for approval. If the bill is approved by the Township, then payment shall be made to the contractor with seven (7) days of the Township meeting as per the "payment cycle."

Release of Liens
Neither the final payment nor any part of the retained percentage shall become due until the Contractor delivers to The Township of Piscataway a complete Release of all Liens arising out of this Contract and an affidavit that so far as he has knowledge or information, the releases include all labor and material for which a lien could be filed, but the Contractor may, if any subcontractor refuses to furnish a release in full, furnish a bond satisfactory to the Township, to indemnify him against any liens. If any lien remains unsatisfied after all payments are made, the Contractor shall refund to The Township of Piscataway all monies that the latter may be compelled to pay in discharging such a lien, including all costs and reasonable attorney's fees

36. PRE-BID MEETING; ATTENDANCE STRONGLY ENCOURAGED!

The pre-bid meeting is an important part of the bidding process. It permits all bidders to have an equal understanding of the procurement/contracting requirements and of the scope of work involved. Although pre-bid meetings are not mandatory, all potential bidders are strongly encouraged to attend. **Please review the General Specifications for a pre-bid meeting announcement**. Any or all changes to the bid specifications discussed as a result of the pre-bid meeting will be formalized in the form of an written addenda to the specifications and distributed in accordance with N.J.S.A. 40A:11-1 et seq.,

It is anticipated that the pre-bid meeting SITE/VISIT (**NONE**) scheduled for this project will have an agenda format such as:

A. Registration Period
At this time all attendees will be asked to register to attend this meeting. Proper photo identification is required. Plans and specifications may be available to download on Township bid website from. Attendance will be recorded.

B. Review of Procurement/Contracting Requirements—Purchasing Agent
The Purchasing Agent will review the major components of the procurement and contracting requirements of the bid.

C. Scope of Work and Scheduled Completion Time— **Henry Hinterstein, Landscape Architect, Assistant Zoning Officer** in conjunction with the **Division Planning & Zoning**, and the Purchasing Agent will review the scope of the work that is requested and completion time requirements (**As per Specification** Number of Working Days). A review of the plans and any drawings may take place.

D. Walkthrough of Facility/Site
Henry, Landscape Architect, Assistant Zoning Officer/Division of Planning & Zoning, in conjunction with the Division of Planning & Zoning and or the Purchasing Agent, may conduct a facility site walkthrough with all interested parties.

E. Questions; Clarifications—Official Addenda Process**(Due Date for Questions& Answers on the Bid is January 10, 2021 BY 12:00 NOON)**
Potential bidders are permitted to ask questions during the process. Questions of substantial measure or questions that require clarification of work to be completed may be answered at the meeting, however, **Henry Hinterstein, Landscape Architect /Division of Planning & Zoning** shall answer all such questions in writing in the form of an official addenda. To: purchasing@piscatawaynj.org

Any and all answers to questions, interpretations or any supplemental instructions will be distributed in the form of a written official addenda to the specifications. The official addenda will be provided by the Purchasing Agent's Office of the Township in accordance with N.J.S.A. 40A:11-1 et Seq., to the bidder by E-mail to: purchasing@piscatawaynj.org , no later than seven (7) days, not including Saturdays, Sundays, or holidays prior to the date for acceptance of the bids. All addenda so issued shall become part of the bid and contract document.

37. BIDDERS COMMNET SHEET

This form is for the Bidder's use in offering voluntary alternates, or other comments intended to afford the Township information or opportunities to improve the quality of the project, without invalidating the bid proposal. It may *not* be used to take exception to specific conditions of the project defined in the contract documents which the Bidder does not like. The bid provided must be based upon the plans and specifications, and all contract conditions, as stated. If these documents or conditions contain some untenable item, or extremely expensive provision, for example, to which the Bidder wishes to raise objection, this must be done at the pre-bid meeting, or in writing to the Purchasing office at: Purchasing@piscatawaynj.org through the question process outlined in the Instructions to Bidders. Such inquiries will have response issued by addendum only, and the resulting decision circulated to all bidders of record.

37. PREVAILING WAGES: CONSTRUCTION, ALTERATIONS, REPAIRS

The State of New Jersey Prevailing Wage Act, Chapter 150 Laws of 1963 with applicable statewide wage

Department of Labor and Workforce Development in conformance with N.J.S.A. 34:11-56.25 et seq., may be included in these bid contract documents. Copies of these wage rates may be obtained from the State Department of Labor and Workforce Development, and/or viewed at http://lwd.dol.state.nj.us/ the Prevailing Wages Determination Section.

Compliance with New Jersey Prevailing Wage Act

Every contractor and subcontractor performing services in connection with this project, shall pay all workers a wage rate not less than the published prevailing wage rates, for the locality the work is being performed, as designated by the New Jersey Department of Labor and Workforce Development.

PREVAILING WAGE ACT.

Pursuant to N.J.S.A. 34:11-56.25 et seq., the Contractors on projects for public work shall adhere to all requirements of the New Jersey Prevailing Wage Act. The contractor shall be required to submit a certified payroll record to the Township within ten ;(10) days of the payment of the wages. In the event it is found that any worker, employed by the Contractor or any subcontractor has been paid a rate of wages less than the prevailing wage required to be paid, the Township may terminate the Contractor's or subcontractor's right to proceed with the work, or such part of the work as to which there has been a failure to pay required wages and the contractor and subcontractor then be required to continue the work to completion or otherwise.

The Contractor is also responsible for obtaining and submitting all subcontractors' certified payroll records within the aforementioned time period. The Contractor shall submit said certified payrolls in the form set forth in N.J.A.C. 12:60- 6.1(c). It is the Contractor's responsibility to obtain any additional copies of the certified payroll form to be submitted by contacting the New Jersey Department of Labor and Workforce Development, Division of Workplace Standards.

Additional information is available at http://lwd.dol.state.nj.us/labor/wagehour/wagerate/pwr_construction.html

Certified Payrolls

Every contractor agrees to submit to The Township of Piscataway a certified payroll for each payroll period within ten (10) days of the payment of wages. The contractor further agrees that no payments will be made to the Contractor by the Township, if certified payrolls are not received by the Township. It is the Contractor's responsibility to insure timely receipt by the Township of certified payrolls.

Submission of Affidavit

Before final payment, the contractor shall furnish The Township of Piscataway with an affidavit stating that all workers have been paid the prevailing rate of wages in accordance with State of New Jersey requirements. The contractor shall keep an accurate record showing the name, craft, or trade and actual hourly rate of wages paid to each workman employed by him in connection with this work. Upon request, the Contractor(s) and each Subcontractor shall file written statements certifying to the amounts then due and owing to any and all workmen for wages due on account of the work. The statements shall be verified by the oaths of the Contractor or Subcontractor, as the case may be.

Posting of Prevailing Wages

The contractor and subcontractor shall post the prevailing wage rates for each craft and classification involved in the work, including the effective date of any changes thereof, in prominent and easily accessible places at the Site of the work and in such place or places as used to pay workmen their wages. N.J.S.A. 34:11-56.32.

PREVAILING WAGE ACT.

Pursuant to N.J.S.A. 34:11-56.25 et seq., The Contractors on projects for public work shall adhere to all requirements of the New Jersey Prevailing Wage Act. The contractor shall be required to submit a certified payroll record to the Township within ten (10) days of the payment of the wages. In the event it is found that any worker, employed by the Contractor or any subcontractor has been paid a rate of wages less than the prevailing wage required to be paid, the Township may terminate the Contractor's or subcontractor's right to proceed with the work, or such part of the work as to which there has been a failure to pay required wages and the contractor and subcontractor then be required to continue the work to completion or otherwise.

The Contractor is also responsible for obtaining and submitting all subcontractors' certified payroll records within the aforementioned time period. The Contractor shall submit said certified payrolls in the form set forth in N.J.A.C. 12:60- 6.1(c). It is the Contractor's responsibility to obtain any additional copies of the certified payroll form to be submitted by contacting the New Jersey Department of Labor and Workforce Development, Division of Workplace Standards.

Additional information is available at http://lwd.dol.state.nj.us/labor/wagehour/wagerate/pwr_construction.html

Prevailing Wages Certification—Submission with Bid

The bidder shall submit a Prevailing Wages Certification with its bid package.

Non-compliance Statement

If it is found that any worker, employed by the contractor or any subcontractor covered by said contract, has been paid a rate of wages less than the prevailing wage required to be paid by such contract, the Township, may begin proceedings to terminate the contractor's or subcontractor's right to proceed with the work, or such part of the work as to which there has been a failure to pay required wages and to prosecute the work to completion or otherwise. The contractor and his sureties shall be liable for any excess costs occasioned thereby to the public body.

38. QUALIFICATION OF BIDDERS - Contractor Questionnaire Certification Form

The Township of Piscataway may make such investigations as it seems necessary to determine the ability of the bidder to perform the terms of the contract. The bidder shall complete a Contractor Questionnaire Certification Form and return same with the bid and shall furnish all information to the Township as the Township may require to determine the contractor's ability to perform the duties and obligations as outlined in these specifications.

All bidders are reminded that bids may be rejected as not being responsive pursuant to N.J.S.A. 40:11-1 et seq., and therefore bidders are asked to complete the Questionnaire and to provide any supporting documentation with the bid package.

39. RESIDENT CITIZENS; PREFERRED IN EMPLOYMENT ON PUBLIC WORKS CONTRACTS

All bidders are to familiarize themselves with N.J.S.A. 34:9-2, which requires the contractor of any public work project to give preference in employment on the project, to citizens of the state of New Jersey. If the terms and conditions of N.J.S.A. 34:9-2 are not complied with, the contract shall be voidable. The Township is obligated to file with the Commissioner of Labor, the names and addresses of all contractors holding contracts with this project.

40. RENEWAL OF CONTRACT; AVAILABILITY AND APPROPRIATION OF FUNDS

The Township of Piscataway may, at its discretion, request that a contract that is subject to renewal, be renewed in full accordance with N.J.S.A. 40:11-1 et s
eq., The Purchasing Agent may negotiate terms for a renewal of contract proposal and present such negotiated proposal to the Township. The Township of Piscataway is the final authority in awarding renewals of contracts. All multi-year contracts and renewals are subject to the availability and appropriation annually of sufficient funds as may be needed to meet the extended obligation.

41. RIGHT TO KNOW LAW

All potentially hazardous materials or substances must be properly labeled in full accordance with the New Jersey Right to Know Law - N.J.S.A. 34:5A-1 et seq. All contractors or vendors who need additional information about the New Jersey Right to Know Law are to contact the:

New Jersey Department of Health and Senior Services
Right to Know Program
CN 368
Trenton, New Jersey 08625-0368
www.nj.gov/health/workplacehealthandsafety/right-to-know/

NEW JERSEY WORKER AND COMMUNITY RIGHT TO KNOW ACT

The manufacturer or supplier of chemical substances or mixtures shall label them in accordance with the N.J. Worker and Community Right to Know Law (N.J.S.A. 34:5A-1 et seq., and N.J.A.C 8:59-2 et seq.,). All direct use containers shall bear a label indicating the chemical name(s) and Chemical Abstracts Service number(s) of all hazardous substances in the container, and all other substances which are among the five most predominant substances in the container, or their trade secret registry number(s) pursuant to N.J.A.C. 8:59-5. "Container" means a receptacle used to hold a liquid, solid or gaseous substance such as bottles, bags, barrels, cans, cylinders, drums and cartons. (N.J.A.C. 8:59-1.3). Further, all applicable Material Safety Data Sheets (MSDS) - hazardous substance fact sheet - must be furnished. All containers which are stored at owner facilities by subcontractors shall display RTK labeling. Vendors with questions concerning labeling should contact the New Jersey Department of Health and Senior Services Right to Know Program for assistance in developing proper labels.

42. <u>STATEMENT OF OWNERSHIP</u> (N.J.S.A. 52:25-24.2)

Statement of Ownership

No business organization, regardless of form of ownership, shall be awarded any contract for the performance of any work or the furnishing of any goods and services, unless, prior to the receipt of the bid or accompanying the bid of said business organization, bidders shall submit a statement setting forth the names and addresses of all persons and entities that own ten percent or more of its stock or interest of any type at all levels of ownership.

The included Statement of Ownership shall be completed and attached to the bid proposal. This requirement applies to all forms of business organizations, including, but not limited to, corporations and partnerships, publicly-owned corporations, limited partnerships, limited liability corporations, limited liability partnerships, sole proprietorship, and Subchapter S corporations**. Failure to submit a disclosure document shall result in rejection of the bid as it cannot be remedied after bids have been opened.**

Not-for-profit entities should fill in their name, check the not-for-profit box, and certify the form. No other information is required.

43.SUBCONTRACTING: Subcontractor Disclosure Statement

Pursuant to N.J.S.A. 40A:11-1 et seq., any bidder who bids for the overall contract and who will subcontract the following work:

- Plumbing and gas fitting work;
- Refrigeration, heating and ventilating systems and equipment;
- Electrical work, tele-data, fire alarm or security systems; and
- Structural steel and ornamental iron work;

Documents to be Submitted: All Subcontractors

The prime contractor (bidders) who will be using a subcontractor on any part of this bid, shall identify the subcontractor(s) on the appropriate form and submit with the bid package the following subcontractor documents at the time indicated in the box below:

SUBCONTRACTOR DOCUMENT SUBMISSIONS		
Estimated Value of Contract – Subcontractor	For Subcontractors in the four major branches listed above: *Submit with Bid*	For all other Subcontractors: *Submit Within ten (10 Days of Receipt of Notice of Award*
$2,000 through $5,999	Contractor's Registration Certificate	
$6,000 through $17,499	Contractor's Registration Certificate New Jersey Business Registration Certificate	
$17,500 through $19,999	Contractor's Registration Certificate New Jersey Business Registration Certificate	
$20,000 or more	Contractor's Registration Certificate New Jersey Business Registration Certificate	

Failure to identify in the Subcontractor's Disclosure Statement the names and addresses of any or all subcontractors required to be named in the bid, or to submit with the bid the appropriate documents for each such subcontractor, may be cause for the bid to be rejected as being non-responsive.

Contractors are reminded that the subcontractors listed on the forms provided by the township may not be changed later, except in the case of failure in performance or other contract breach where a change is needed to protect the township.

IF THE SUBSCONTRACTORS FORMS DOES NOT APPLY PLEASE WRITE N/A AND SIGN THE BOTTOM OF PAGE.

44.SUBCONTRACTING: PROHIBITIONS: HOLD HARMLESS

Prime contractors, with whom The Township of Piscataway have an executed contract, may not subcontract any part of any work done for the Township without first receiving written approval from the Township. Contractors seeking to use subcontractors must first complete the Request to Sub Contract Form as provided by the Building Services Department.

Subcontractors Prohibited to Sub Contract

It is the responsibility of the prime contractor to ensure that no subcontractor who has received written permission to do work for the Township, subcontracts any of its/their work without first receiving written approval from the prime contractor **and** the Director of Public Works or his designee.

The prime contractor assumes all responsibility for work performed by subcontractors. The prime contractor must also provide to the Township Purchasing Office the following documents secured from all approved subcontractors:

- Insurance Certificate as outlined in the bid specifications;
- Affirmative Action Evidence as outlined in the bid specifications;
- Written certification that the subcontractor shall adhere to prevailing wages as provided through New Jersey State Law;
- Evidence of Performance Security;
- Documents listed in the Subcontractor Document Submissions list.

In cases of subcontracting, The Township of Piscataway shall only pay the prime contractor. It is the sole responsibility of the prime contractor to ensure that all subcontractors are paid. The Township of Piscataway shall not be responsible for payments to subcontractors and shall be held harmless against any or all claims generated against prime contractors for non-payment to subcontractors.

Penalties – Unauthorized Subcontractors

The Township of Piscataway shall deduct the amount of $1,000.00 (one thousand dollars) per day as a penalty, for each day a prime contractor uses a subcontractor without first receiving **written** permission from the Building Services Department.

45. TAXES; Contractor's Use of Township's Tax Identification Number—Prohibited

As a New Jersey governmental entity, The Township of Piscataway is exempt from the requirements under New Jersey state sales and use tax (N.J.S.A. 54:32B-1 et seq.), and does not pay any sales or use taxes. Bidders should note that they are expected to comply with the provisions of said statute and the rules and regulations promulgated thereto to qualify them for examinations and reference to any and all labor, services, materials and supplies furnished to the Township. Contractors may not use the Township's tax identification number to purchase supplies, materials, service or equipment, for this project.

A contractor may qualify for a New Jersey Sales Tax Exemption on the purchase of materials, supplies and services when these purchases are used exclusively to fulfill the terms and conditions of the contract with the Township. All contractors are referred to New Jersey Division of Taxation–Tax Bulletin S&U-3 and in particular, Contractor's Exempt Purchase Certificate (Form ST-13). Again, contractors are not permitted to use the Township's tax identification number to purchase supplies, materials, services of equipment. **Sample is attached to the bid for the Contractor Information- ST-13 FORM.**

ST-13 FORM WILL BE ATTACHED TO THE CONTRACT ONCE AWARDED.

W-9 REQUIRED ONCE AWARD. May be submitted with bid. For faster procedures.
Successful bidder/respondent shall complete W-9 Form and submit to Purchasing prior to contract award. Than form is available at the following link: www.irs.gov/pub/irs-pdf/fw9.pdf

46. Pay to Play-NOTICE OF DISCLOSURE REQUIREMENT

Business entities are advised of their responsibility to file an annual disclosure statement of political contributions with the New Jersey Election Law Enforcement Commission (ELEC) pursuant to N.J.S.A> 19:44A-20.27 if they receive contracts in excess of $50,000 from public entities in a calendar year. Business entities are responsible for determining if filing is necessary. Additional information on this requirement is available from ELEC at 888-313-3532 or at www.elect.state.nj.us.

47. TERMINATION OF CONTRACT

If the Township determines that the contractor has failed to comply with the terms and conditions of the bid and/or proposal upon which the issuance of the contract is based or that the contractor has failed to perform said service, duties and or responsibilities in a timely, proper, professional and/or efficient manner, then the Township shall have the authority to terminate the contract upon written notice setting forth the reason for termination and effective date of termination.
Termination by the Township of the contract does not absolve the contractor from potential liability for damages caused the Township by the contractor's breach of this agreement. The Township may withhold payment due the contractor and apply same towards damages once established. The Township will act diligently in accordance with governing statutes to mitigate damages. Damages may include the additional cost of procuring said services or goods from other sources.

The contractor further agrees to indemnify and hold the Township harmless from any liability to subcontractors or suppliers concerning work performed or goods provided arising out of the lawful termination of this agreement.

48. WITHDRAWAL OF BIDS

Before the Bid Opening

The Purchasing Agent may consider a written request from a bidder to withdraw a bid if the written request is received by the Purchasing Agent before the advertised time of the bid opening. Any bidder who has been granted permission by the Purchasing Agent to have his/her bid withdrawn cannot re-submit a bid for the same advertised bid project. That bidder shall also be disqualified from future bidding on the same project if the project is re-bid.

After the Bid Opening

The Township of Piscataway may consider a written request from a bidder to withdraw a bid, if the written request is received by the Purchasing Agent within five (5) business days after the bid opening. A request to withdraw a bid after the specified number of days will not be honored.

The contractor/vendor who wishes to withdraw a bid must provide a certification supported by written factual evidence that an error or omission was made by the contractor and that the error or omission was a substantial computational error or an unintentional omission or both.

The request to withdraw a bid after the bid opening may be reviewed by the Purchasing Agent, the Director of Public Works , other interested administrators; and the Department of Public Works of Record for the project (if necessary) and/or the Township Attorney and a recommendation will be made to the Township. If the Township of Piscataway grants permission to have the bid withdrawn the contractor/vendor shall be disqualified from bidding on the same project if the project is re-bid. If the contractor/vendor fails to meet the burden of proof to have the bid withdrawn the request to withdraw the bid will be denied and if the contractor/vendor fails to execute the contract the bid guarantee will be forfeited and become property of the Township.

49. Pre-Construction and Construction Conferences

Before construction is started, preconstruction conferences shall be held. During the first conference The Township of Piscataway Project Manager, his Engineer, Administrator, Purchasing Agent and the Contractor will discuss the procedures to be followed by the Contractor during the construction process. The Contractor will also be required to attend a preconstruction conference attended by all utility companies and State and local authorities. During the construction, job meetings shall be held at frequent intervals to review construction and restoration progress and to resolve difficulties which might delay completion of the work. Attendees at these meetings shall include representatives of the Township of Piscataway Project Manager, the Engineer, Administrator and Purchasing Agent and the Contractor. A Notice to Proceed must be sent to the awarded Contractor by the Project Manager. A Copy of the Notice to Proceed must be submitted to the Purchasing Agent.

50. **WORK HOURS / INSPECTION**

The contractor shall work only during the normal work hours of the Township unless authorized by the Township Engineer/ DPW/ CODE/ LANDSCAPE, ZONING to do otherwise. Overtime shall be considered those hours before 8:30 A.M and after 4:30 P.M. Monday thru Friday. In addition, Saturday, Sunday and all Township holidays will be considered overtime. The Contractor will be responsible to pay all overtime worked by the Township Inspector or Representative. There shall be an inspector on the job site at all times when the contractor is working.

Supplemental Specifications

2022-REHABILITATION OF VARIOUS PARK COURTS & RINK

AWARD OF CONTRACT

The Township of Piscataway intends to award the contract for the project as follows:

_____

_____

EXPERIENCE

The Township of Piscataway requires evidence from all bidders that they have completed work or projects of a similar nature as outlined in the bid package. Bidders are to provide evidence of satisfactory completion of work of similar nature as outlined in the bid from other governmental bodies _____(_____) for at least (__**5**__) years. **See attached Plan & Experience forms in the bid. As Per Specifications.**

NUMBER OF WORKING DAYS; TIME OF COMPLETION

The contractor agrees to substantially complete this Public Works Project to the satisfaction of The Township of Piscataway within ___**AS PER SPEC'S** (_____) working days from the receipt of the official Notice to Proceed and purchase order. The Township has defined a working day as a calendar day. **As Per Specifications/Proposal pages .**

The number of working days set by the Township may be extended by mutual agreement between the contractor and the Township. The mutual agreement shall be in writing and will be considered an addendum to the contract.

PRE-BID MEETING

A pre-bid meeting for this project is scheduled for (Site Visit Not Mandatory) **Strongly Encourage for the Contractor to visit the Project location.**

N/A

_____

Month / Day / Year

10:00 a.m.

The Township of Piscataway

The purpose of this meeting is to review the legal and technical requirements of the bid proposal. While attendance is not mandatory, prospective bidders are strongly encouraged to attend this important meeting. Addenda to this bid proposal may be issued as a result of the pre-bid meeting.

TRADE CLASSIFICATION(S) (Optional)

A. Bidder:

For the purpose of this Public Works bid, each bidder shall be classified by the State of New Jersey—Division of Property Management and Construction in the following trade(s):

Classification Code	Classification Trade Name
_____ *(List Code #)*	_____*(List name of trade)*

Proof of classification shall be submitted with the bid package in the form of a current Notice of Classification as issued by the New Jersey Division of Property Management and Construction.

B. Subcontractor:

For the purpose of this Public Works bid, each bidder shall use a subcontractor that is properly classified by the State of New Jersey—Division of Property Management and Construction in the following trade(s):

Classification Code	Classification Trade Name
_____ *(List Code #)*	_____*(List name of trade)*

Proof of classification, in the form of a current Notice of Classification form, for each Sub-Contractor, shall be submitted by the bidder with the bid package for any estimated subcontractor work exceeding $20,000.00.

Bid No. 2022-01-02

THE TOWNSHIP OF PISCATAWAY

"2022-REHABILITATION OF VARIOUS PARK COURTS & RINKS"

TECHNICAL SPECIFICATIONS

Pages 1-48

MARIA E. VALENTE-CAEMMERER

Purchasing Agent/Township Secretary

SPECIAL INSTRUCTIONS TO BIDDERS

ARTICLE S-1 SITE EXAMINATION

Bidders shall examine the site of the work before submitting their proposals.

ARTICLE S-2 SPECIFICATION AND INSPECTIONS

All construction will conform to Township of Piscataway specifications and inspections. The contractor shall provide the Township Landscape Architect or his representatives with one copy of all delivery slips for materials used in the project. All materials found defective during the progress of the work will be rejected by the Landscape Architect or his representative, and the contractor shall promptly remove such defective material from the job site.

ARTICLE S-3 MATERIALS

All materials used in this project are to meet the approval of the Township Landscape Architect or his representative.

ARTICLE S-4 UTILITY COMPANIES

All utility companies are to be notified by the contractor prior to start of construction to insure that their facilities will not defer the course of construction, and to insure accurate locations and safety considerations. The contractor shall not start the work until he has notified all utilities and all utilities have marked the location of their facilities in the field.

ARTICLE S-5 EXECUTION OF CONTRACT

The successful bidder, to whom a contract has been awarded shall, within 10 days of the date of said award, execute and deliver the required contract documents and performance bond.

ARTICLE S-6 CONSTRUCTION MATERIAL AND PROCEDURE

All prices to be quoted for this project shall include the necessary cost to remove and replace all obstacles to the proper completion of the work unless noted otherwise. Such obstacles may include street signs, benches, fences, existing curb and pavement, shrubbery and others as designated by the Township Landscape Architect and as shown on the plans.

ARTICLE S-7 NOTICE TO PROCEED

A "Notice to Proceed" will be issued by the Township from which time the contractor shall diligently pursue the completion of the work under the contract.

ARTICLE S-8 MAINTENANCE BOND

Upon completion of the work, as evidenced by approval by the Township and final payment, the contractor shall furnish a maintenance bond of a sum equal to ten percent (10%) of the contract price and said bond shall remain in full with the Township for a period of one year after the date of acceptance of the project.

ARTICLE S-9 COMMENCEMENT OF WORK

Contractor shall begin work no later than ten days after issuance of "Notice to Proceed." All contract work shall be satisfactorily completed within 60 consecutive calendar days subsequent to issuance of the "Notice to Proceed." Bidder must agree also to pay as liquidated damages, the sum of $150.00 for each consecutive calendar days thereafter as hereinafter provided in Article G-34 of the "General Instructions to Bidders."

ARTICLE S-10 DAMAGES TO UTILITIES AND OTHER STRUCTURES

The contractor shall be responsible for all injury to water pipes, fire hydrants, gas pipes, electrical wire conduits, sewers, and other structures met within the prosecution of the work and shall be liable for damages to public or private property resulting there from which amounts may be deducted from any estimate due him. The contractor is required to sling, shore-up and secure in their place all water pipes, gas pipes, electrical conduits and sewers without injury, and to provide for and maintain the flow of water, gas. electricity, drainage, and water courses, whether on the surface or underground, which may intercepted or interrupted during and by the progress of the work. When necessary, to change the location of gas pipes, electrical conduits or any other underground structures owned or controlled by corporations other than the Township, the change will be made by the owners, and any additional cost will be borne by the contractor. The contractor shall give every facility for doing the work.

ARTICLE S-11 PROTECTION AGAINST ACCIDENT

The contractor shall erect suitable barriers around the project to prevent accidents to passerby, and shall place and maintain, during the night, sufficient lights and reflective barrels on or near the work. The Contractor shall have charge of, and be responsible for the entire scope of the construction for which he or she has contracted, until its completion and acceptance.

ARTICLE S-12 PROTECTION OF PROPERTY

The Contractor shall, at its expense, shore up, protect and make good, as may be necessary, all buildings, walls, fences, or other property injured, or liable to be injured during the progress of the work and the Contractor will be held responsible for the entire scope of the construction for which he has contracted until its completion and acceptance.

ARTICLE S-13 "THE PUBLIC WORKS CONTRACTOR REGISTRATION ACT "

All named contractors must be registered with the Department of Labor pursuant to the Public Works Contractor Registration Act at the time the proposal is received, or the proposal will be determined to be non-responsive.

Any non-listed contractor must be registered with the Department of Labor prior to physically starting work.

Contact Information

Contractor Registration Unit
Division of Wage and Hour Compliance
New Jersey Department of Labor
P.O. Box 389
Trenton, New Jersey, 08626-0389

Telephone : 609-292-9464
Fax : 609-633-8591
E-Mail : contreg@dol.state.nj.us
Web Site : www.nj.gov/labor/lsse/lspubcon.html

ARTICLE S-13.1 "BUSINESS REGISTRATION CERTIFICATION"

In accordance with state law P.L.2004, c57, all business organizations that do business with a local contracting agent are required to be registered with the State and provide proof of that registration to the contracting agency before the contracting agency may enter into a contract with the business.

ALL NAMED/LISTED BIDDERS MUST SUBMIT A COPY OF THEIR PROOF OF REGISTRATION WITH BIDS.

Failure to submit proof of registration is considered a mandatory rejection of bids. (a non-waivable defect). This covers construction work as well as non-construction bids. N.J.S.A. 40A:23.2 adds business registration to the mandatory list of documents submitted in a construction bid.

Contact Information

Instructions: www.nj.gov/dca/lgs/lpcl/buregis/bus_reg_instruct_4.doc
Instructions: www.nj.gov/treasury/revenue/busregcert.htm
Instructions: www.state.nj.us/treasury/revenue/busregcert.htm

" New Jersey Business Registration Requirements "

N.J.S.A. 52:32-44 imposes the following requirements on contractors and all subcontractors that **knowingly** provide goods or perform services for a contractor fulfilling this contract:

1) the contractor shall provide written notice to its subcontractors and suppliers to submit proof of business registration to the contractor;
2) subcontractors through all tiers of a project must provide written notice to their subcontractors and suppliers to submit proof of business registration and subcontractors shall collect such proofs of business registration and maintain them on file;
3) prior to receipt of final payment from a contracting agency, a contractor must submit to the contacting agency an accurate list of all subcontractors and suppliers or attest that none was used; and,
4) during the term of this contract, the contractor and its affiliates shall collect and remit, and shall notify all subcontractors and their affiliates that they must collect and remit, to the Director, New Jersey Division of Taxation, the use tax due pursuant to the Sales and Use Tax Act, (N.J.S.A. 54:32B-1 et seq.) on all sales of tangible personal property delivered into this State.

A contractor, subcontractor or supplier who fails to provide proof of business registration or provides false business registration information shall be liable to a penalty of $25 for each day of violation, not to exceed $50,000 for each business registration copy not properly provided or maintained under a contract with a contracting agency. Information on the law and its requirements are available by calling (609) 292-9292.

ARTICLE S-14 REHABILITATION OF NEW MARKET PARK BASKETBALL COURT, APPROXIMATELY 667 S.Y. (ITEM #1)

S-14.1 DESCRIPTION

This item shall include all necessary labor, materials, machinery, tools, and supplies to rehabilitate the New Market Park basketball court, as shown on the plans, and in accordance with details and specifications.

S-14.2 MATERIALS

Crack filler shall be an approved fortified acrylic type as manufactured by California Products Corp., Inc., or approved equal, and is to be applied as per manufacture's specifications after cracks have been cleaned.

Crack repair system is to be Armor crack repair system, as manufactured and distributed by Armor, Farmingdale, NJ 07727 or approved equal. All materials and methods of application shall conform strictly to the manufacturer's specifications for same.

Crack repair epoxy for large expanded saw cut joints and large cracks shall be True Bond CT, as manufactured by R. C. Davis Company, Inc. or approved equal.

Acrylic leveling/patching compound shall be Court Patch Binder, a product of California Products Corp. or approved equal, and is to be applied as per manufacture's specifications after the surface and cracks have been cleaned and repaired.

Acrylic Resurfacer shall be a California Products Corp. product or approved equal, and is to be applied as per manufacture's specifications after the surface and cracks have been cleaned and repaired.

Color coat surface shall be Plexipave color system, a product of California Products Corp., or approved equal. Plexipave color system specifications for new construction shall be used. In general the color system consists of the following:

A. Acrylic Resurfacer (2 coats)
B. Fortified Plexipave (2 coats)
C. Plexicolor Line Paint: textured white line paint

All materials and methods of application shall conform strictly to the manufacturer's specifications for same. The color of all the court surfaces shall be "Dark Green", with white line striping, and "Velocity Blue" borders, key box, and center circle.

Basketball goals shall be Jaypro Sports, LLC orange powder coated, heavy duty double rim style, model no. GDR-54 or approved equal. (2 required)

Basketball goal nets shall be Jaypro Sports, LLC heavy duty nylon, model no. JNY-4HP or approved equal. (2 required).

S-14.3 METHODS OF CONSTRUCTION

Remove basket goals to prevent use during rehabilitation.

Clean, sand as necessary, and repaint entire backboards, both front and back with an appropriate metal paint. Paint sample and specifications shall be submitted for approval.

Saw cut lines shall be filled and sealed with a crack repair epoxy product as specified. (If applicable)

All court cracks shall be repaired using the Armor crack repair system.

All gouges and peeling color coating shall be cleaned and filled with an approved acrylic leveling/patching compound.

All unacceptable depressions greater than 1/16” and no deeper than 1/2” shall be identified and corrected using an acrylic leveling/patching compound used for patching and correcting defects in asphalt. A depression shall be considered unacceptable if it retains a depth of 1/16” (or greater) of water after a period of ninety minutes at an ambient temperature of 70 degree Fahrenheit.

Install color coat system and court lines.

Install new basketball goals and nets.

S-14.4 QUANTITY AND PAYMENT

Payment for the rehabilitation of the New Market Park basketball court shall be on a Lump Sum basis as given in the proposal, complete in place. The lump sum bid price shall include furnishing all materials, equipment, tools, machinery, labor, grading, disposal of debris, repair to any damaged lawn and sidewalk, clean up, and all else necessary to present upon completion of the project a rehabilitated basketball court at New Market Park, in accordance with plans, details and specifications.

ARTICLE S-15 REHABILITATION OF NEW MARKET PARK TENNIS COURT, APPROXIMATELY 813 S.Y. (ITEM #2)

S-15.1 DESCRIPTION

This item shall include all necessary labor, materials, machinery, tools, and supplies to rehabilitate the New Market Park tennis court and eliminate excess pavement, as shown on the plans, and in accordance with details and specifications.

S-15.2 MATERIALS

Crack repair system is to be Armor crack repair system, as manufactured and distributed by Armor, Farmingdale, NJ 07727 or approved equal. All materials and methods of application shall conform strictly to the manufacturer's specifications for same.

Crack filler shall be an approved fortified acrylic type as manufactured by California Products Corp., Inc., or approved equal, and is to be applied as per manufacture's specifications after cracks have been cleaned.

Crack repair epoxy for large expanded saw cut joints shall be True Bond CT, as manufactured by R. C. Davis Company, Inc. or approved equal.

Acrylic leveling/patching compound shall be Court Patch Binder, a product of California Products Corp. or approved equal, and is to be applied as per manufacture's specifications after the surface and cracks have been cleaned and repaired.

Acrylic Resurfacer shall be a California Products Corp. product or approved equal, and is to be applied as per manufacture's specifications after the surface and cracks have been cleaned and repaired.

Color coat surface shall be Plexipave color system, a product of California Products Corp., or approved equal. Plexipave color system specifications for new construction shall be used. In general the color system consists of the following:

A. Acrylic Resurfacer (2 coats)
B. Fortified Plexipave (2 coats)
C. Plexicolor Line Paint: textured white line paint

All materials and methods of application shall conform strictly to the manufacturer's specifications for same. The color of all the court surfaces shall be "Velocity Blue", with white line striping, and "Dark Green" borders.

Tennis net posts - Courtmaster, manufactured by J.A. Cissel Mfg. Co., #244 or approved equal (1 pair required, black).

Tennis net - Courtmaster, manufactured by J.A. Cissel Mfg. Co., #701HVY or approved equal (1 required).

Center Strap - Courtmaster, manufactured by J.A. Cissel Mfg. Co., #753C or approved equal (1 required).

Fertilizer - 10-20-15 Commercial designation.

Seed - Rebel II tall fescue blend as manufactured by Lofts Inc. of Somerset, N.J. or approved equal.

Mulch – Weed Free Straw

S-15.3 METHODS OF CONSTRUCTION

Remove and dispose of a 48’ x 60’ (320 S.Y) area of pavement and stone outside of the tennis court fence, beginning 2’ off of the tennis court fence. Remove entire pavement section in this area, along with enough stone (if needed) to leave the area 4” below the adjacent finished grade.

Install a minimum of 4” of topsoil to the area where pavement has been removed to the adjacent finished grade, lightly compacting to eliminate settlement potential.

Seed, fertilize, and mulch the area using the specified materials.

Remove tennis court hardware and net.

Saw cut lines shall be filled and sealed with a crack repair epoxy product as specified (if applicable).

All court cracks shall be repaired using the Armor crack repair system.

All gouges and peeling color coating shall be cleaned and filled with an approved acrylic leveling/patching compound.

All unacceptable depressions greater than 1/16” and no deeper than 1/2” shall be identified and corrected using an acrylic leveling/patching compound used for patching and correcting defects in asphalt. A depression shall be considered unacceptable if it retains a depth of 1/16” (or greater) of water after a period of ninety minutes at an ambient temperature of 70 degree Fahrenheit.

Install color coat system and court lines.

Install new tennis court hardware.

Install new tennis net and center strap.

S-15.4 QUANTITY AND PAYMENT

Payment for the rehabilitation of the New Market Park tennis court shall be on a Lump Sum basis as given in the proposal, complete in place. The lump sum bid price shall include furnishing all materials, equipment, tools, machinery, and labor, as well as all excavating, hauling, grading, disposal of debris, topsoiling, seeding, mulching, repair to any damaged lawn and sidewalk, clean up, and all else necessary to present upon completion of the project a rehabilitated tennis court at New Market Park, in accordance with plans, details and specifications.

ARTICLE S-16 REHABILITATION OF DAY PARK BASKETBALL COURTS, (2 COURTS) APPROXIMATELY 1,191 S.Y. (ITEM #3)

S-16.1 DESCRIPTION

This item shall include all necessary labor, materials, machinery, tools, and supplies to rehabilitate the Day Park basketball courts, as shown on the plans, and in accordance with details and specifications.

S-16.2 MATERIALS

Crack repair system is to be Armor crack repair system, as manufactured and distributed by Armor, Farmingdale, NJ 07727 or approved equal. All materials and methods of application shall conform strictly to the manufacturer's specifications for same.

Crack filler shall be an approved fortified acrylic type as manufactured by California Products Corp., Inc., or approved equal, and is to be applied as per manufacture's specifications after cracks have been cleaned.

Crack repair epoxy for large expanded saw cut joints and large cracks shall be True Bond CT, as manufactured by R. C. Davis Company, Inc. or approved equal.

Acrylic leveling/patching compound shall be Court Patch Binder, a product of California Products Corp. or approved equal, and is to be applied as per manufacture's specifications after the surface and cracks have been cleaned and repaired.

Acrylic Resurfacer shall be a California Products Corp. product or approved equal, and is to be applied as per manufacture's specifications after the surface and cracks have been cleaned and repaired.

Color coat surface shall be Plexipave color system, a product of California Products Corp., or approved equal. Plexipave color system specifications for new construction shall be used. In general the color system consists of the following:

A. Acrylic Resurfacer (2 coats)
B. Fortified Plexipave (2 coats)
C. Plexicolor Line Paint: textured white line paint

All materials and methods of application shall conform strictly to the manufacturer's specifications for same. The color of all the court surfaces shall be "Dark Green", with white line striping, and "Velocity Blue" borders, key box, and center circle.

Basketball goals shall be Jaypro Sports, LLC orange powder coated, heavy duty double rim style, model no. GDR-54 or approved equal. (4 required)

Basketball goal nets shall be Jaypro Sports, LLC heavy duty nylon, model no. JNY-4HP or approved equal. (4 required).

S-16.3 METHODS OF CONSTRUCTION

Remove basket goals to prevent use during rehabilitation.

Saw cut lines shall be filled and sealed with a crack repair epoxy product as specified. (If applicable)

Clean, sand as necessary, and repaint entire backboards, both front and back with an appropriate metal paint. Paint sample and specifications shall be submitted for approval.

All court cracks shall be repaired using the Armor crack repair system.

All gouges and peeling color coating shall be cleaned and filled with an approved acrylic leveling/patching compound.

All unacceptable depressions greater than 1/16” and no deeper than 1/2” shall be identified and corrected using an acrylic leveling/patching compound used for patching and correcting defects in asphalt. A depression shall be considered unacceptable if it retains a depth of 1/16” (or greater) of water after a period of ninety minutes at an ambient temperature of 70 degree Fahrenheit.

Install color coat system and court lines.

Install new basketball goals and nets.

S-16.4 QUANTITY AND PAYMENT

Payment for the rehabilitation of the Day Park basketball courts shall be on a Lump Sum basis as given in the proposal, complete in place. The lump sum bid price shall include furnishing all materials, equipment, tools, machinery, and labor, disposal of debris, repair to any damaged lawn and sidewalk, clean up, and all else necessary to present upon completion of the project rehabilitated basketball courts at Day Park, in accordance with plans, details and specifications.

ARTICLE S-17 REHABILITATION OF DAY PARK TENNIS COURTS (2 COURTS), APPROXIMATELY 1,480 S.Y. (ITEM #4)

S-17.1 DESCRIPTION

This item shall include all necessary labor, materials, machinery, tools, and supplies to rehabilitate the Day Park tennis courts, as shown on the plans, and in accordance with details and specifications.

S-17.2 MATERIALS

Crack repair system is to be Armor crack repair system, as manufactured and distributed by Armor, Farmingdale, NJ 07727 or approved equal. All materials and methods of application shall conform strictly to the manufacturer's specifications for same.

Crack filler shall be an approved fortified acrylic type as manufactured by California Products Corp., Inc., or approved equal, and is to be applied as per manufacture's specifications after cracks have been cleaned.

Crack repair epoxy for large expanded saw cut joints shall be True Bond CT, as manufactured by R. C. Davis Company, Inc. or approved equal.

Acrylic leveling/patching compound shall be Court Patch Binder, a product of California Products Corp. or approved equal, and is to be applied as per manufacture's specifications after the surface and cracks have been cleaned and repaired.

Acrylic Resurfacer shall be a California Products Corp. product or approved equal, and is to be applied as per manufacture's specifications after the surface and cracks have been cleaned and repaired.

Color coat surface shall be Plexipave color system, a product of California Products Corp., or approved equal. Plexipave color system specifications for new construction shall be used. In general the color system consists of the following:

A. Acrylic Resurfacer (2 coats)
B. Fortified Plexipave (2 coats)
C. Plexicolor Line Paint: textured white line paint

All materials and methods of application shall conform strictly to the manufacturer's specifications for same. The color of all the court surfaces shall be "Velocity Blue", with white line striping, and "Dark Green" borders.

Tennis net posts - Courtmaster, manufactured by J.A. Cissel Mfg. Co., #244 or approved equal (2 pair required, black).

Tennis net - Courtmaster, manufactured by J.A. Cissel Mfg. Co., #701HVY or approved equal (2 required).

Center Strap - Courtmaster, manufactured by J.A. Cissel Mfg. Co., #753C or approved equal (2 required).

S-17.3 METHODS OF CONSTRUCTION

Remove tennis court hardware and nets.

Saw cut lines shall be filled and sealed with a crack repair epoxy product as specified.

All court cracks shall be repaired using the Armor crack repair system.

All gouges and peeling color coating shall be cleaned and filled with an approved acrylic leveling/patching compound.

All unacceptable depressions greater than 1/16” and no deeper than 1/2” shall be identified and corrected using an acrylic leveling/patching compound used for patching and correcting defects in asphalt. A depression shall be considered unacceptable if it retains a depth of 1/16” (or greater) of water after a period of ninety minutes at an ambient temperature of 70 degree Fahrenheit.

Install color coat system and court lines.

Install new tennis court hardware.

Install new tennis nets and center straps.

S-17.4 QUANTITY AND PAYMENT

Payment for the rehabilitation of the Day Park tennis courts shall be on a Lump Sum basis as given in the proposal, complete in place. The lump sum bid price shall include furnishing all materials, equipment, tools, machinery, and labor, as well as all disposal of debris, repair to any damaged lawn and sidewalk, clean up, and all else necessary to present upon completion of the project a rehabilitated tennis courts at Day Park, in accordance with plans, details and specifications.

ARTICLE S-18 REHABILITATION OF IRISHTOWN PARK ROLLER HOCKEY RINK, APPROXIMATELY 1,400 S.Y. (ITEM #5)

S-18.1 DESCRIPTION

This item shall include all necessary labor, materials, machinery, tools, and supplies to rehabilitate Irishtown Park Inline Roller Hockey Rink, as shown on the plans, and in accordance with details and specifications.

S-18.2 MATERIALS

Hot Mix Asphalt Surface Course 12.5M64, 2" Thick, surface course, shall comply with the requirements of the N.J.D.O.T. Standard Specifications for Road and Construction - 2007, as amended.

Paving reinforcement fabric shall be Petromat Eviro or approved equal. Any materials or methods used must meet NJDOT standards. This fabric will be installed on a cleaned milled surface in accordance to manufacturer's specifications.

Crack filler shall be an approved fortified acrylic type as manufactured by California Products Corp., Inc., or approved equal, and is to be applied as per manufacture's specifications after cracks have been cleaned.

Concrete repair epoxy for areas with exposed dasher board footing shall be True Bond, as manufactured by R. C. Davis Company, Inc. or approved equal.

Acrylic leveling/patching compound shall be Court Patch Binder, a product of California Products Corp. or approved equal, and is to be applied as per manufacture's specifications after the surface and cracks have been cleaned and repaired.

Acrylic Resurfacer shall be a California Products Corp. product or approved equal, and is to be applied as per manufacture's specifications after the surface and cracks have been cleaned and repaired.

Color coat surface system shall be Plexiflor In-line Skating Surfacing System, a product of California Product Corp., or approved equal. The color system specifications for new construction shall be used. In general, the color system consists of the following:

A. Acrylic Resurfacer (2 coats)
B. Fortified Plexipave (2 coats)
C. Plexiflor (2 Coats)
D. Plexicolor Line Paint: textured red line paint

Cap rail (red) shall be ¾" (19mm) thick x 5 7/8" (149mm) wide UV stabilized polyethylene. Cap rail shall be spliced into a maximum of 48" (1219mm) long pieces to allow the material to expand and contract. Front and back edge of the cap rail shall be rounded for a smooth finish. Cap rail shall be connected to the

aluminum frame with ¼” x 1” (6 x 25mm) Stainless Steel Philips type F machine screws. All heads shall be countersunk and color matched for a professional finish. Cap rail as manufactured by Sport Systems Unlimited Corp and distributed by Athletica Sport Systems, 17200 Medina Rd., Suite 600, Minneapolis, MN 55447 or approved equal.

Dasher Board Kick plate, 1/4” thick x 6” high UV stabilized, gold fiberglass, as manufactured by Sport Systems Unlimited Corp., and distributed by Athletica Sport Systems, 17200 Medina Rd., Suite 600, Minneapolis, MN 55447 or approved equal.

Goals - Manufactured by Sport Systems Unlimited Corp., and distributed by Athletica Sport Systems, 17200 Medina Rd., Suite 600, Minneapolis, MN 55447 or approved equal. (1 pair required).

S-18.3 METHODS OF CONSTRUCTION

Remove goals from rink and deliver to public works yard.

Remove dasher boards and fence sections as necessary to access rink for milling and paving operation.

Mill entire surface of rink 2” thick, removing and disposing of all millings.

All cracks 1/8" and larger, remaining after milling shall be cleaned and filled with novacaulk or an approved acrylic patch binder.

Install petromat paving fabric over the entire court after patching and crack filling is complete.

Pave the entire court with a 2” surface course overlay of bituminous concrete type 12.5M64.

Clean and powerwash all dasher boards, both sides. Any graffiti and or stains that can not be removed by washing shall be painted with an exterior grade latex paint, matching the board color.

Repair/and or replace bench fence gates as required.

Add and additional horizontal fence rail to the lower back 40’ behind each goal, for a total of 80’. Repair and re-tie chain link mesh if possible, or replace 40’ behind each goal where the multiple horizontal rails exist.

All unacceptable depressions greater than 1/16” and no deeper than 1/2” shall be identified and corrected using an acrylic leveling compound used for patching and correcting defects in asphalt. A depression shall be considered unacceptable if it retains a depth of 1/16” (or greater) of water after a period of ninety minutes at an ambient temperature of 70 degree Fahrenheit.

All pavement shall be installed using a self-contained, power-propelled bituminous concrete paver, containing an activated screed or strike-off assembly, and capable of spreading and finishing bituminous concrete in the widths and thickness required. Bituminous concrete paver shall be equipped and operated with automatic laser grade and slope control. The automatic laser control system must maintain the screed or strike-off in a constant position relative to grade references. The references shall be such that control of the screed or strike-off position is independent of irregularities in the underlying surface and of spreader operation. All Pavement shall be properly compacted with an 8 ton two-axle tandem roller, and a two-wheel finish roller.

Reinstall dasher boards and fencing previously removed.

Install color coat system and rink line striping and circles. All materials and methods of application shall conform strictly to the manufacturer's specifications for same. The color of the rink surface shall be "true blue", with red line striping.

Remove and replace inline hockey dasher board kick plate as per the plans, details, and manufacturers specifications. New gold screws should be used for the installation.

Remove and replace broken cap rail as directed in accordance with manufacturers specifications. New red screws should be used for the installation. All cap rail at benches and penalty box area shall be replaced.

Install hockey goals, as per specifications.

S-18.4 QUANTITY AND PAYMENT

Payment for the rehabilitation of the inline roller hockey rink at Irishtown Park shall be on a Lump Sum basis as given in the proposal, complete in place. The lump sum bid price shall include furnishing all materials, equipment, tools, machinery, and labor, as well as all disposal of debris and millings, repair to any damaged lawn and sidewalk, clean up, and all else necessary to present upon completion of the project a rehabilitated inline roller hockey rink at Irishtown Park, in accordance with plans, details and specifications.

ARTICLE S-19 REHABILITATION OF IRISHTOWN PARK BASKETBALL COURT, APPROXIMATELY 933 S.Y. (ITEM #6)

S-19.1 DESCRIPTION

This item shall include all necessary labor, materials, machinery, tools, and supplies to rehabilitate the Irishtown Park basketball court, as shown on the plans, and in accordance with details and specifications.

S-19.2 MATERIALS

Crack repair system is to be Armor crack repair system, as manufactured and distributed by Armor, Farmingdale, NJ 07727 or approved equal. All materials and methods of application shall conform strictly to the manufacturer's specifications for same.

Crack filler shall be an approved fortified acrylic type as manufactured by California Products Corp., Inc., or approved equal, and is to be applied as per manufacture's specifications after cracks have been cleaned.

Crack repair epoxy for large expanded saw cut joints and large cracks shall be True Bond CT, as manufactured by R. C. Davis Company, Inc. or approved equal.

Acrylic leveling/patching compound shall be Court Patch Binder, a product of California Products Corp. or approved equal, and is to be applied as per manufacture's specifications after the surface and cracks have been cleaned and repaired.

Acrylic Resurfacer shall be a California Products Corp. product or approved equal, and is to be applied as per manufacture's specifications after the surface and cracks have been cleaned and repaired.

Color coat surface shall be Plexipave color system, a product of California Products Corp., or approved equal. Plexipave color system specifications for new construction shall be used. In general the color system consists of the following:

A. Acrylic Resurfacer (2 coats)
B. Fortified Plexipave (2 coats)
C. Plexicolor Line Paint: textured white line paint

All materials and methods of application shall conform strictly to the manufacturer's specifications for same. The color of all the court surfaces shall be "Dark Green", with white line striping, and "Velocity Blue" borders, key box, and center circle.

Basketball goals shall be Jaypro Sports, LLC orange powder coated, heavy duty double rim style, model no. GDR-54 or approved equal. (2 required)

Basketball goal nets shall be Jaypro Sports, LLC heavy duty nylon, model no. JNY-4HP or approved equal. (2 required).

S-19.3 METHODS OF CONSTRUCTION

Remove basket goals to prevent use during rehabilitation.

Clean, sand as necessary, and repaint entire backboards, both front and back with an appropriate metal paint. Paint sample and specifications shall be submitted for approval.

All court cracks shall be repaired using the Armor crack repair system.
All gouges and peeling color coating shall be cleaned and filled with an approved acrylic leveling/patching compound.

All unacceptable depressions greater than 1/16” and no deeper than 1/2” shall be identified and corrected using an acrylic leveling/patching compound used for patching and

correcting defects in asphalt. A depression shall be considered unacceptable if it retains a depth of 1/16” (or greater) of water after a period of ninety minutes at an ambient temperature of 70 degree Fahrenheit.

Install color coat system and court lines.

Install new basketball goals and nets.

S-19.4 QUANTITY AND PAYMENT

Payment for the rehabilitation of the Irishtown Park basketball court shall be on a Lump Sum basis as given in the proposal, complete in place. The lump sum bid price shall include furnishing all materials, equipment, tools, machinery, and labor, disposal of debris, repair to any damaged lawn and sidewalk, clean up, and all else necessary to present upon completion of the project rehabilitated basketball court at Irishtown Park, in accordance with plans, details and specifications.

ARTICLE S-20 REHABILITATION OF IRISHTOWN PARK TENNIS COURT, (1 COURT) APPROXIMATELY 800 S.Y. (ITEM #7)

S-20.1 DESCRIPTION

This item shall include all necessary labor, materials, machinery, tools, and supplies to rehabilitate the Irishtown Park tennis court, as shown on the plans, and in accordance with details and specifications.

S-20.2 MATERIALS

Crack repair system is to be Armor crack repair system, as manufactured and distributed by Armor, Farmingdale, NJ 07727 or approved equal. All materials and methods of application shall conform strictly to the manufacturer's specifications for same.

Crack filler shall be an approved fortified acrylic type as manufactured by California Products Corp., Inc., or approved equal, and is to be applied as per manufacture's specifications after cracks have been cleaned.

Crack repair epoxy for large expanded saw cut joints shall be True Bond CT, as manufactured by R. C. Davis Company, Inc. or approved equal.

Acrylic leveling/patching compound shall be Court Patch Binder, a product of California Products Corp. or approved equal, and is to be applied as per manufacture's specifications after the surface and cracks have been cleaned and repaired.

Acrylic Resurfacer shall be a California Products Corp. product or approved equal, and is to be applied as per manufacture's specifications after the surface and cracks have been cleaned and repaired.

Color coat surface shall be Plexipave color system, a product of California Products Corp., or approved equal. Plexipave color system specifications for new construction shall be used. In general the color system consists of the following:

A. Acrylic Resurfacer (2 coats)
B. Fortified Plexipave (2 coats)
C. Plexicolor Line Paint: textured white line paint

All materials and methods of application shall conform strictly to the manufacturer's specifications for same. The color of all the court surfaces shall be "Velocity Blue", with white line striping, and "Dark Green" borders.

Tennis net posts - Courtmaster, manufactured by J.A. Cissel Mfg. Co., #244 or approved equal (1 pair required, black).

Tennis net - Courtmaster, manufactured by J.A. Cissel Mfg. Co., #701HVY or approved equal (1 required).

Center Strap - Courtmaster, manufactured by J.A. Cissel Mfg. Co., #753C or approved equal (1 required).

S-20.3 METHODS OF CONSTRUCTION

Remove tennis court hardware and nets.

Saw cut lines shall be filled and sealed with a crack repair epoxy product as specified.

All court cracks shall be repaired using the Armor crack repair system.

All gouges and peeling color coating shall be cleaned and filled with an approved acrylic leveling/patching compound.

All unacceptable depressions greater than 1/16” and no deeper than 1/2” shall be identified and corrected using an acrylic leveling/patching compound used for patching and correcting defects in asphalt. A depression shall be considered unacceptable if it retains a depth of 1/16” (or greater) of water after a period of ninety minutes at an ambient temperature of 70 degree Fahrenheit.

Install color coat system and court lines.

Install new tennis court hardware.

Install new tennis net and center strap.

S-20.4 QUANTITY AND PAYMENT

Payment for the rehabilitation of the Irishtown Park tennis court shall be on a Lump Sum basis as given in the proposal, complete in place. The lump sum bid price shall include furnishing all materials, equipment, tools, machinery, and labor, grading, disposal of debris, repair to any damaged lawn and sidewalk, clean up, and all else necessary to present upon completion of the project rehabilitated tennis courts at Irishtown Park, in accordance with plans, details and specifications.

ARTICLE S-21 REHABILITATION OF PERRINE PARK ROLLER HOCKEY RINK, APPROXIMATELY 1,400 S.Y. (ITEM #8)

S-21.1 DESCRIPTION

This item shall include all necessary labor, materials, machinery, tools, and supplies to rehabilitate Byrne Park Inline Roller Hockey Rink, as shown on the plans, and in accordance with details and specifications.

S-21.2 MATERIALS

Hot Mix Asphalt Surface Course 12.5M64, 2” Thick, surface course, shall comply with the requirements of the N.J.D.O.T. Standard Specifications for Road and Construction - 2007, as amended.

Paving reinforcement fabric shall be Petromat Eviro or approved equal. Any materials or methods used must meet NJDOT standards. This fabric will be installed on a cleaned milled surface in accordance to manufacturer's specifications.

Crack filler shall be an approved fortified acrylic type as manufactured by California Products Corp., Inc., or approved equal, and is to be applied as per manufacture's specifications after cracks have been cleaned.

Concrete repair epoxy for areas with exposed dasher board footing shall be True Bond, as manufactured by R. C. Davis Company, Inc. or approved equal.

Acrylic leveling/patching compound shall be Court Patch Binder, a product of California Products Corp. or approved equal, and is to be applied as per manufacture's specifications after the surface and cracks have been cleaned and repaired.

Acrylic Resurfacer shall be a California Products Corp. product or approved equal, and is to be applied as per manufacture's specifications after the surface and cracks have been cleaned and repaired.

Color coat surface system shall be Plexiflor In-line Skating Surfacing System, a product of California Product Corp., or approved equal. The color system specifications for new construction shall be used. In general, the color system consists of the following:

A. Acrylic Resurfacer (2 coats)
B. Fortified Plexipave (2 coats)
C. Plexiflor (2 Coats)
D. Plexicolor Line Paint: textured red line paint

Cap rail (red) shall be ¾” (19mm) thick x 5 7/8” (149mm) wide UV stabilized polyethylene. Cap rail shall be spliced into a maximum of 48” (1219mm) long pieces to allow the material to expand and contract. Front and back edge of the cap rail shall be rounded for a smooth finish. Cap rail shall be connected to the aluminum frame with ¼” x 1” (6 x 25mm) Stainless Steel Philips type F machine screws. All heads shall be countersunk and color matched for a professional finish. Cap rail as manufactured by Sport Systems Unlimited Corp and distributed by Athletica Sport Systems, 17200 Medina Rd., Suite 600, Minneapolis, MN 55447 or approved equal.

Dasher Board Kick plate, 1/4” thick x 6” high UV stabilized, gold fiberglass, as manufactured by Sport Systems Unlimited Corp., and distributed by Athletica Sport Systems, 17200 Medina Rd., Suite 600, Minneapolis, MN 55447 or approved equal.

Goals - Manufactured by Sport Systems Unlimited Corp., and distributed by Athletica Sport Systems, 17200 Medina Rd., Suite 600, Minneapolis, MN 55447 or approved equal. (1 pair required).

S-21.3 METHODS OF CONSTRUCTION

Remove goals from rink and deliver to public works yard.

Remove dasher boards and fence sections as necessary to access rink for milling and paving operation.

Mill entire surface of rink 2” thick, removing and disposing of all millings.

All cracks 1/8" and larger, remaining after milling shall be cleaned and filled with novacaulk or an approved acrylic patch binder.

Install petromat paving fabric over the entire court after patching and crack filling is complete.

Pave the entire court with a 2” surface course overlay of bituminous concrete type 12.5M64.

Clean and powerwash all dasher boards, both sides. Any graffiti and or stains that can not be removed by washing shall be painted with an exterior grade latex paint, matching the board color.

Repair/and or replace bench fence gates as required.

Add and additional horizontal fence rail to the lower back 40’ behind each goal, for a total of 80’. Repair and re-tie chain link mesh if possible, or replace 40’ behind each goal where the multiple horizontal rails exist.

All unacceptable depressions greater than 1/16” and no deeper than 1/2” shall be identified and corrected using an acrylic leveling compound used for patching and correcting defects in asphalt. A depression shall be considered unacceptable if it retains a depth of 1/16” (or greater) of water after a period of ninety minutes at an ambient temperature of 70 degree Fahrenheit.

All pavement shall be installed using a self-contained, power-propelled bituminous concrete paver, containing an activated screed or strike-off assembly, and capable of spreading and finishing bituminous concrete in the widths and thickness required. Bituminous concrete paver shall be equipped and operated with automatic laser grade and slope control. The automatic laser control system must maintain the screed or strike-off in a constant position relative to grade references. The references shall be such that control of the screed or strike-off position is independent of irregularities in the underlying surface and of spreader operation. All Pavement shall be properly compacted with an 8 ton two-axle tandem roller, and a two-wheel finish roller.

Reinstall dasher boards and fencing previously removed.

Install color coat system and rink line striping and circles. All materials and methods of application shall conform strictly to the manufacturer's specifications for same. The color of the rink surface shall be "true blue", with red line striping.

Remove and replace inline hockey dasher board kick plate as per the plans, details, and manufacturers specifications. New gold screws should be used for the installation.

Remove and replace broken cap rail as directed in accordance with manufacturers specifications. New red screws should be used for the installation. All cap rail at benches and penalty box area shall be replaced.

Install hockey goals, as per specifications.

S-21.4 QUANTITY AND PAYMENT

Payment for the rehabilitation of the inline roller hockey rink at Perrine Park shall be on a Lump Sum basis as given in the proposal, complete in place. The lump sum bid price shall include furnishing all materials, equipment, tools, machinery, and labor, as well as all disposal of debris and millings, repair to any damaged lawn and sidewalk, clean up, and all else necessary to present upon completion of the project a rehabilitated inline roller hockey rink at Perrine Park, in accordance with plans, details and specifications.

ARTICLE S-22 REHABILITATION OF PERRINE PARK TENNIS COURTS, (2 COURTS) APPROXIMATELY 1,440 S.Y. (ITEM #9)

S-22.1 DESCRIPTION

This item shall include all necessary labor, materials, machinery, tools, and supplies to rehabilitate the Perrine Park tennis courts, as shown on the plans, and in accordance with details and specifications.

S-22.2 MATERIALS

Crack repair system is to be Armor crack repair system, as manufactured and distributed by Armor, Farmingdale, NJ 07727 or approved equal. All materials and methods of application shall conform strictly to the manufacturer's specifications for same.

Crack repair epoxy for large expanded saw cut joints shall be True Bond CT, as manufactured by R. C. Davis Company, Inc. or approved equal.

Crack filler shall be an approved fortified acrylic type as manufactured by California Products Corp., Inc., or approved equal, and is to be applied as per manufacture's specifications after cracks have been cleaned.

Acrylic leveling/patching compound shall be Court Patch Binder, a product of California Products Corp. or approved equal, and is to be applied as per manufacture's specifications after the surface and cracks have been cleaned and repaired.

Acrylic Resurfacer shall be a California Products Corp. product or approved equal, and is to be applied as per manufacture's specifications after the surface and cracks have been cleaned and repaired.

Color coat surface shall be Plexipave color system, a product of California Products Corp., or approved equal. Plexipave color system specifications for new construction shall be used. In general the color system consists of the following:

A. Acrylic Resurfacer (2 coats)
B. Fortified Plexipave (2 coats)
C. Plexicolor Line Paint: textured white line paint

All materials and methods of application shall conform strictly to the manufacturer's specifications for same. The color of all the court surfaces shall be "Velocity Blue", with white line striping, and "Dark Green" borders.

Tennis net posts - Courtmaster, manufactured by J.A. Cissel Mfg. Co., #244 or approved equal (2 pair required, black).

Tennis net - Courtmaster, manufactured by J.A. Cissel Mfg. Co., #701HVY or approved equal (2 required).

Center Strap - Courtmaster, manufactured by J.A. Cissel Mfg. Co., #753C or approved equal (2 required).

S-22.3 METHODS OF CONSTRUCTION

Remove tennis court hardware and nets.

Saw cut lines shall be filled and sealed with a crack repair epoxy product as specified.

All court cracks shall be repaired using the Armor crack repair system.

All gouges and peeling color coating shall be cleaned and filled with an approved acrylic leveling/patching compound.

All unacceptable depressions greater than 1/16" and no deeper than 1/2" shall be identified and corrected using an acrylic leveling/patching compound used for patching and correcting defects in asphalt. A depression shall be considered unacceptable if it retains a depth of 1/16" (or greater) of water after a period of ninety minutes at an ambient temperature of 70 degree Fahrenheit.

Install color coat system and court lines.

Install new tennis court hardware.

Install new tennis nets and center straps.

S-22.4 QUANTITY AND PAYMENT

Payment for the rehabilitation of the Perrine Park tennis courts shall be on a Lump Sum basis as given in the proposal, complete in place. The lump sum bid price shall include furnishing all materials, equipment, tools, machinery, and labor, grading, disposal of debris, repair to any damaged lawn and sidewalk, clean up, and all else necessary to present upon completion of the project rehabilitated tennis courts at Perrine Park, in accordance with plans, details and specifications.

ARTICLE S-23 REHABILITATION OF PERRINE PARK BASKETBALL COURT, APPROXIMATELY 887 S.Y. (ITEM #10)

S-23.1 DESCRIPTION

This item shall include all necessary labor, materials, machinery, tools, and supplies to rehabilitate the Perrine Park basketball court, as shown on the plans, and in accordance with details and specifications.

S-23.2 MATERIALS

Crack repair system is to be Armor crack repair system, as manufactured and distributed by Armor, Farmingdale, NJ 07727 or approved equal. All materials and methods of application shall conform strictly to the manufacturer's specifications for same.

Crack filler shall be an approved fortified acrylic type as manufactured by California Products Corp., Inc., or approved equal, and is to be applied as per manufacture's specifications after cracks have been cleaned.

Crack repair epoxy for large expanded saw cut joints and large cracks shall be True Bond CT, as manufactured by R. C. Davis Company, Inc. or approved equal.

Acrylic leveling/patching compound shall be Court Patch Binder, a product of California Products Corp. or approved equal, and is to be applied as per manufacture's specifications after the surface and cracks have been cleaned and repaired.

Acrylic Resurfacer shall be a California Products Corp. product or approved equal, and is to be applied as per manufacture's specifications after the surface and cracks have been cleaned and repaired.

Color coat surface shall be Plexipave color system, a product of California Products Corp., or approved equal. Plexipave color system specifications for new construction shall be used. In general the color system consists of the following:

A. Acrylic Resurfacer (2 coats)
B. Fortified Plexipave (2 coats)
C. Plexicolor Line Paint: textured white line paint

All materials and methods of application shall conform strictly to the manufacturer's specifications for same. The color of all the court surfaces shall be "Dark Green", with white line striping, and "Velocity Blue" borders, key box, and center circle.

Basketball goals shall be Jaypro Sports, LLC orange powder coated, heavy duty double rim style, model no. GDR-54 or approved equal. (2 required)

Basketball goal nets shall be Jaypro Sports, LLC heavy duty nylon, model no. JNY-4HP or approved equal. (2 required).

S-23.3 METHODS OF CONSTRUCTION

Remove basket goals to prevent use during rehabilitation.

Clean, sand as necessary, and repaint entire backboards, both front and back with an appropriate metal paint. Paint sample and specifications shall be submitted for approval.

All court cracks shall be repaired using the Armor crack repair system.

All gouges and peeling color coating shall be cleaned and filled with an approved acrylic leveling/patching compound.

All unacceptable depressions greater than 1/16” and no deeper than 1/2” shall be identified and corrected using an acrylic leveling/patching compound used for patching and correcting defects in asphalt. A depression shall be considered unacceptable if it retains a depth of 1/16” (or greater) of water after a period of ninety minutes at an ambient temperature of 70 degree Fahrenheit.

Install color coat system and court lines.

Install new basketball goals and nets.

S-23.4 QUANTITY AND PAYMENT

Payment for the rehabilitation of the Perrine Park basketball court shall be on a Lump Sum basis as given in the proposal, complete in place. The lump sum bid price shall include furnishing all materials, equipment, tools, machinery, and labor, disposal of debris, repair to any damaged lawn and sidewalk, clean up, and all else necessary to present upon completion of the project rehabilitated basketball court at Perrine Park, in accordance with plans, details and specifications.

ARTICLE S-24 REHABILITATION OF KROEGER PARK BASKETBALL COURT, APPROXIMATELY 933 S.Y. (ITEM #11)

S-23.1 DESCRIPTION

This item shall include all necessary labor, materials, machinery, tools, and supplies to rehabilitate the Kroeger Park basketball court, as shown on the plans, and in accordance with details and specifications.

S-24.2 MATERIALS

Crack repair system is to be Armor crack repair system, as manufactured and distributed by Armor, Farmingdale, NJ 07727 or approved equal. All materials and methods of application shall conform strictly to the manufacturer's specifications for same.

Crack repair epoxy for large expanded saw cut joints shall be True Bond CT, as manufactured by R. C. Davis Company, Inc. or approved equal.

Crack filler shall be an approved fortified acrylic type as manufactured by California Products Corp., Inc., or approved equal, and is to be applied as per manufacture's specifications after cracks have been cleaned.

Acrylic leveling/patching compound shall be Court Patch Binder, a product of California Products Corp. or approved equal, and is to be applied as per manufacture's specifications after the surface and cracks have been cleaned and repaired.

Acrylic Resurfacer shall be a California Products Corp. product or approved equal, and is to be applied as per manufacture's specifications after the surface and cracks have been cleaned and repaired.

Color coat surface shall be Plexipave color system, a product of California Products Corp., or approved equal. Plexipave color system specifications for new construction shall be used. In general the color system consists of the following:

A. Acrylic Resurfacer (2 coats)
B. Fortified Plexipave (2 coats)
C. Plexicolor Line Paint: textured white line paint

All materials and methods of application shall conform strictly to the manufacturer's specifications for same. The color of all the court surfaces shall be "Dark Green", with white line striping, and "Velocity Blue" borders, key box, and center circle.

Basketball goals shall be Jaypro Sports, LLC orange powder coated, heavy duty double rim style, model no. GDR-54 or approved equal. (2 required)

Basketball goal nets shall be Jaypro Sports, LLC heavy duty nylon, model no. JNY-4HP or approved equal. (2 required).

S-24.3 METHODS OF CONSTRUCTION

Remove basket goal to prevent use during rehabilitation.

Clean, sand as necessary, and repaint entire backboards, both front and back with an appropriate metal paint. Paint sample and specifications shall be submitted for approval.

All court cracks shall be repaired using the Armor crack repair system.

All gouges and peeling color coating shall be cleaned and filled with an approved acrylic leveling/patching compound.

All unacceptable depressions greater than 1/16” and no deeper than 1/2” shall be identified and corrected using an acrylic leveling/patching compound used for patching and correcting defects in asphalt. A depression shall be considered unacceptable if it retains a depth of 1/16” (or greater) of water after a period of ninety minutes at an ambient temperature of 70 degree Fahrenheit.

Install color coat system and court lines.

Install new basketball goals and nets.

S-24.4 QUANTITY AND PAYMENT

Payment for the rehabilitation of the Kroeger Park basketball court shall be on a Lump Sum basis as given in the proposal, complete in place. The lump sum bid price shall include furnishing all materials, equipment, tools, machinery, and labor, grading, disposal of debris, repair to any damaged lawn and sidewalk, clean up, and all else necessary to present upon completion of the project rehabilitated basketball court at Kroeger Park, in accordance with plans, details and specifications.

ARTICLE S-25 REHABILITATION OF KROEGER PARK TENNIS COURT, APPROXIMATELY 800 S.Y. (ITEM #12)

S-25.1 DESCRIPTION

This item shall include all necessary labor, materials, machinery, tools, and supplies to rehabilitate the Kroeger Park tennis court, as shown on the plans, and in accordance with details and specifications.

S-25.2 MATERIALS

Crack repair system is to be Armor crack repair system, as manufactured and distributed by Armor, Farmingdale, NJ 07727 or approved equal. All materials and methods of application shall conform strictly to the manufacturer's specifications for same.

Crack repair epoxy for large expanded saw cut joints shall be True Bond CT, as manufactured by R. C. Davis Company, Inc. or approved equal.

Crack filler shall be an approved fortified acrylic type as manufactured by California Products Corp., Inc., or approved equal, and is to be applied as per manufacture's specifications after cracks have been cleaned.

Acrylic leveling/patching compound shall be Court Patch Binder, a product of California Products Corp. or approved equal, and is to be applied as per manufacture's specifications after the surface and cracks have been cleaned and repaired.

Acrylic Resurfacer shall be a California Products Corp. product or approved equal, and is to be applied as per manufacture's specifications after the surface and cracks have been cleaned and repaired.

Color coat surface shall be Plexipave color system, a product of California Products Corp., or approved equal. Plexipave color system specifications for new construction shall be used. In general the color system consists of the following:

A. Acrylic Resurfacer (2 coats)
B. Fortified Plexipave (2 coats)
C. Plexicolor Line Paint: textured white line paint

All materials and methods of application shall conform strictly to the manufacturer's specifications for same. The color of all the court surfaces shall be "Velocity Blue", with white line striping, and "Dark Green" borders.

Tennis net posts - Courtmaster, manufactured by J.A. Cissel Mfg. Co., #244 or approved equal (1 pair required, black).

Tennis net - Courtmaster, manufactured by J.A. Cissel Mfg. Co., #701HVY or approved equal (1 required).

Center Strap - Courtmaster, manufactured by J.A. Cissel Mfg. Co., #753C or approved equal (1 required).

S-25.3 METHODS OF CONSTRUCTION

Remove tennis court hardware and net.

Saw cut lines shall be filled and sealed with a crack repair epoxy product as specified.

All court cracks shall be repaired using the Armor crack repair system.

All gouges and peeling color coating shall be cleaned and filled with an approved acrylic leveling/patching compound.

All unacceptable depressions greater than 1/16” and no deeper than 1/2” shall be identified and corrected using an acrylic leveling/patching compound used for patching and correcting defects in asphalt. A depression shall be considered unacceptable if it retains a depth of 1/16” (or greater) of water after a period of ninety minutes at an ambient temperature of 70 degree Fahrenheit.

Install color coat system and court lines.

Install new tennis court hardware.

Install new tennis net and center strap.

S-25.4 QUANTITY AND PAYMENT

Payment for the rehabilitation of the Kroeger Park tennis court shall be on a Lump Sum basis as given in the proposal, complete in place. The lump sum bid price shall include furnishing all materials, equipment, tools, machinery, and labor, grading, disposal of debris, repair to any damaged lawn and sidewalk, clean up, and all else necessary to present upon completion of the project a rehabilitated tennis court at Kroeger Park, in accordance with plans, details and specifications.

ARTICLE S-26 REHABILITATION OF KROEGER PARK (LUDLOW STREET) TENNIS COURT, APPROXIMATELY 800 S.Y. (ITEM #13)

S-26.1 DESCRIPTION

This item shall include all necessary labor, materials, machinery, tools, and supplies to rehabilitate the Kroeger Park (Ludlow Street) tennis court, as shown on the plans, and in accordance with details and specifications.

S-26.2 MATERIALS

Crack repair system is to be Armor crack repair system, as manufactured and distributed by Armor, Farmingdale, NJ 07727 or approved equal. All materials and methods of application shall conform strictly to the manufacturer's specifications for same.

Crack repair epoxy for large expanded saw cut joints shall be True Bond CT, as manufactured by R. C. Davis Company, Inc. or approved equal.

Crack filler shall be an approved fortified acrylic type as manufactured by California Products Corp., Inc., or approved equal, and is to be applied as per manufacture's specifications after cracks have been cleaned.

Acrylic leveling/patching compound shall be Court Patch Binder, a product of California Products Corp. or approved equal, and is to be applied as per manufacture's specifications after the surface and cracks have been cleaned and repaired.

Acrylic Resurfacer shall be a California Products Corp. product or approved equal, and is to be applied as per manufacture's specifications after the surface and cracks have been cleaned and repaired.

Color coat surface shall be Plexipave color system, a product of California Products Corp., or approved equal. Plexipave color system specifications for new construction shall be used. In general the color system consists of the following:

A. Acrylic Resurfacer (2 coats)
B. Fortified Plexipave (2 coats)
C. Plexicolor Line Paint: textured white line paint

All materials and methods of application shall conform strictly to the manufacturer's specifications for same. The color of all the court surfaces shall be "Velocity Blue", with white line striping, and "Dark Green" borders.

Tennis net posts - Courtmaster, manufactured by J.A. Cissel Mfg. Co., #244 or approved equal (1 pair required, black).

Tennis net - Courtmaster, manufactured by J.A. Cissel Mfg. Co., #701HVY or approved equal (1 required).

Center Strap - Courtmaster, manufactured by J.A. Cissel Mfg. Co., #753C or approved equal (1 required).

S-26.3 METHODS OF CONSTRUCTION

Remove tennis court hardware and net.

Saw cut lines shall be filled and sealed with a crack repair epoxy product as specified.

All court cracks shall be repaired using the Armor crack repair system.

All gouges and peeling color coating shall be cleaned and filled with an approved acrylic leveling/patching compound.

All unacceptable depressions greater than 1/16" and no deeper than 1/2" shall be identified and corrected using an acrylic leveling/patching compound used for patching and correcting defects in asphalt. A depression shall be considered unacceptable if it retains a depth of 1/16" (or greater) of water after a period of ninety minutes at an ambient temperature of 70 degree Fahrenheit.

Install color coat system and court lines.

Install new tennis court hardware.

Install new tennis net and center strap.

S-26.4 QUANTITY AND PAYMENT

Payment for the rehabilitation of the Kroeger Park (Ludlow Street) tennis court shall be on a Lump Sum basis as given in the proposal, complete in place. The lump sum bid price shall include furnishing all materials, equipment, tools, machinery, and labor, grading, disposal of debris, repair to any damaged lawn and sidewalk, clean up, and all else necessary to present upon completion of the project a rehabilitated tennis court at Kroeger Park (Ludlow Street), in accordance with plans, details and specifications.

ARTICLE S-27 REHABILITATION OF REDBUD PARK ½ BASKETBALL COURT, APPROXIMATELY 252 S.Y. (ITEM #14)

S-27.1 DESCRIPTION

This item shall include all necessary labor, materials, machinery, tools, and supplies to rehabilitate the Redbud Park ½ basketball court, as shown on the plans, and in accordance with details and specifications.

S-27.2 MATERIALS

Crack repair system is to be Armor crack repair system, as manufactured and distributed by Armor, Farmingdale, NJ 07727 or approved equal. All materials and methods of application shall conform strictly to the manufacturer's specifications for same.

Crack filler shall be an approved fortified acrylic type as manufactured by California Products Corp., Inc., or approved equal, and is to be applied as per manufacture's specifications after cracks have been cleaned.

Acrylic leveling/patching compound shall be Court Patch Binder, a product of California Products Corp. or approved equal, and is to be applied as per manufacture's specifications after the surface and cracks have been cleaned and repaired.

Acrylic Resurfacer shall be a California Products Corp. product or approved equal, and is to be applied as per manufacture's specifications after the surface and cracks have been cleaned and repaired.

Color coat surface shall be Plexipave color system, a product of California Products Corp., or approved equal. Plexipave color system specifications for new construction shall be used. In general the color system consists of the following:

A. Acrylic Resurfacer (2 coats)
B. Fortified Plexipave (2 coats)
C. Plexicolor Line Paint: textured white line paint

All materials and methods of application shall conform strictly to the manufacturer's specifications for same. The color of all the court surfaces shall be "Dark Green", with white line striping, and "Velocity Blue" borders, key box, and center circle.

Basketball goals shall be Jaypro Sports, LLC orange powder coated, heavy duty double rim style, model no. GDR-54 or approved equal. (1 required)

Basketball goal nets shall be Jaypro Sports, LLC heavy duty nylon, model no. JNY-4HP or approved equal. (1 required).

S-27.3 METHODS OF CONSTRUCTION

Remove basket goal to prevent use during rehabilitation.

Clean, sand as necessary, and repaint entire backboards, both front and back with an appropriate metal paint. Paint sample and specifications shall be submitted for approval.

All court cracks shall be repaired using the Armor crack repair system.

All gouges and peeling color coating shall be cleaned and filled with an approved acrylic leveling/patching compound.

All unacceptable depressions greater than 1/16” and no deeper than 1/2” shall be identified and corrected using an acrylic leveling/patching compound used for patching and correcting defects in asphalt. A depression shall be considered unacceptable if it retains a depth of 1/16” (or greater) of water after a period of ninety minutes at an ambient temperature of 70 degree Fahrenheit.

Install color coat system and court lines.

Install new basketball goal and net.

S-27.4 QUANTITY AND PAYMENT

Payment for the rehabilitation of the Red Bud Park ½ basketball court shall be on a Lump Sum basis as given in the proposal, complete in place. The lump sum bid price shall include furnishing all materials, equipment, tools, machinery, and labor, grading, disposal of debris, repair to any damaged lawn and sidewalk, clean up, and all else necessary to present upon completion of the project a rehabilitated basketball court at Red Bud Park, in accordance with plans, details and specifications.

ARTICLE S-28 REHABILITATION OF SCHOOL STREET PARK BASKETBALL COURT, APPROXIMATELY 731 S.Y. (ITEM #15)

S-28.1 DESCRIPTION

This item shall include all necessary labor, materials, machinery, tools, and supplies to rehabilitate the School Street Park basketball court, as shown on the plans, and in accordance with details and specifications.

S-28.2 MATERIALS

Crack repair system is to be Armor crack repair system, as manufactured and distributed by Armor, Farmingdale, NJ 07727 or approved equal. All materials and methods of application shall conform strictly to the manufacturer's specifications for same.

Crack repair epoxy for large expanded saw cut joints shall be True Bond CT, as manufactured by R. C. Davis Company, Inc. or approved equal.

Crack filler shall be an approved fortified acrylic type as manufactured by California Products Corp., Inc., or approved equal, and is to be applied as per manufacture's specifications after cracks have been cleaned.

Acrylic leveling/patching compound shall be Court Patch Binder, a product of California Products Corp. or approved equal, and is to be applied as per manufacture's specifications after the surface and cracks have been cleaned and repaired.

Acrylic Resurfacer shall be a California Products Corp. product or approved equal, and is to be applied as per manufacture's specifications after the surface and cracks have been cleaned and repaired.

Color coat surface shall be Plexipave color system, a product of California Products Corp., or approved equal. Plexipave color system specifications for new construction shall be used. In general the color system consists of the following:

A. Acrylic Resurfacer (2 coats)
B. Fortified Plexipave (2 coats)
C. Plexicolor Line Paint: textured white line paint

All materials and methods of application shall conform strictly to the manufacturer's specifications for same. The color of all the court surfaces shall be "Dark Green", with white line striping, and "Velocity Blue" borders, key box, and center circle.

Basketball goals shall be Jaypro Sports, LLC orange powder coated, heavy duty double rim style, model no. GDR-54 or approved equal. (2 required)

Basketball goal nets shall be Jaypro Sports, LLC heavy duty nylon, model no. JNY-4HP or approved equal. (2 required).

S-28.3 METHODS OF CONSTRUCTION

Remove basket goal to prevent use during rehabilitation.

Clean, sand as necessary, and repaint entire backboards, both front and back with an appropriate metal paint. Paint sample and specifications shall be submitted for approval.

All court cracks shall be repaired using the Armor crack repair system.

All gouges and peeling color coating shall be cleaned and filled with an approved acrylic leveling/patching compound.

All unacceptable depressions greater than 1/16” and no deeper than 1/2” shall be identified and corrected using an acrylic leveling/patching compound used for patching and correcting defects in asphalt. A depression shall be considered unacceptable if it retains a depth of 1/16” (or greater) of water after a period of ninety minutes at an ambient temperature of 70 degree Fahrenheit.

Install color coat system and court lines.

Install new basketball goals and nets.

S-28.4 QUANTITY AND PAYMENT

Payment for the rehabilitation of the School Street Park basketball court shall be on a Lump Sum basis as given in the proposal, complete in place. The lump sum bid price shall include furnishing all materials, equipment, tools, machinery, labor, grading, disposal of debris, repair to any damaged lawn and sidewalk, clean up, and all else necessary to present upon completion of the project a rehabilitated basketball court at School Street Park, in accordance with plans, details and specifications.

ARTICLE S-29 REHABILITATION OF SCHOOL STREET PARK TENNIS COURTS, (2 COURTS, APPROXIMATELY 1,466 S.Y. (ITEM #16)

S-29.1 DESCRIPTION

This item shall include all necessary labor, materials, machinery, tools, and supplies to rehabilitate the School Street Park tennis courts, as shown on the plans, and in accordance with details and specifications.

S-29.2 MATERIALS

Crack repair system is to be Armor crack repair system, as manufactured and distributed by Armor, Farmingdale, NJ 07727 or approved equal. All materials and methods of application shall conform strictly to the manufacturer's specifications for same.

Crack repair epoxy for large expanded saw cut joints shall be True Bond CT, as manufactured by R. C. Davis Company, Inc. or approved equal.

Crack filler shall be an approved fortified acrylic type as manufactured by California Products Corp., Inc., or approved equal, and is to be applied as per manufacture's specifications after cracks have been cleaned.

Acrylic leveling/patching compound shall be Court Patch Binder, a product of California Products Corp. or approved equal, and is to be applied as per manufacture's specifications after the surface and cracks have been cleaned and repaired.

Acrylic Resurfacer shall be a California Products Corp. product or approved equal, and is to be applied as per manufacture's specifications after the surface and cracks have been cleaned and repaired.

Color coat surface shall be Plexipave color system, a product of California Products Corp., or approved equal. Plexipave color system specifications for new construction shall be used. In general the color system consists of the following:

A. Acrylic Resurfacer (2 coats)
B. Fortified Plexipave (2 coats)
C. Plexicolor Line Paint: textured white line paint

All materials and methods of application shall conform strictly to the manufacturer's specifications for same. The color of all the court surfaces shall be "Velocity Blue", with white line striping, and "Dark Green" borders.

Tennis net posts - Courtmaster, manufactured by J.A. Cissel Mfg. Co., #244 or approved equal (2 pair required, black).

Tennis net - Courtmaster, manufactured by J.A. Cissel Mfg. Co., #701HVY or approved equal (2 required).

Center Strap - Courtmaster, manufactured by J.A. Cissel Mfg. Co., #753C or approved equal (2 required).

S-29.3 METHODS OF CONSTRUCTION

Remove tennis court hardware and nets.

Saw cut lines shall be filled and sealed with a crack repair epoxy product as specified.

All court cracks shall be repaired using the Armor crack repair system.

All gouges and peeling color coating shall be cleaned and filled with an approved acrylic leveling/patching compound.

All unacceptable depressions greater than 1/16” and no deeper than 1/2” shall be identified and corrected using an acrylic leveling/patching compound used for patching and correcting defects in asphalt. A depression shall be considered unacceptable if it retains a depth of 1/16” (or greater) of water after a period of ninety minutes at an ambient temperature of 70 degree Fahrenheit.

Install color coat system and court lines.

Install new tennis court hardware.

Install new tennis nets and center straps.

S-29.4 QUANTITY AND PAYMENT

Payment for the rehabilitation of the School Street Park tennis courts shall be on a Lump Sum basis as given in the proposal, complete in place. The lump sum bid price shall include furnishing all materials, equipment, tools, machinery, and labor, grading, disposal of debris, repair to any damaged lawn and sidewalk, clean up, and all else necessary to present upon completion of the project rehabilitated tennis courts at School Street Park, in accordance with plans, details and specifications.

ARTICLE S-30 REHABILITATION OF HOLMES MARSHALL PARK BASKETBALL COURTS, (2 COURTS) APPROXIMATELY 1,260 S.Y. (ITEM #18)

S-30.1 DESCRIPTION

This item shall include all necessary labor, materials, machinery, tools, and supplies to rehabilitate the Holmes Marshall Park basketball courts, as shown on the plans, and in accordance with details and specifications.

S-30.2 MATERIALS

Concrete shall be 4,500 psi.

Hot Mix Asphalt Surface Course 12.5M64, 2" Thick, surface course, shall comply with the requirements of the N.J.D.O.T. Standard Specifications for Road and Construction - 2007, as amended.

Paving reinforcement fabric shall be Petromat Eviro or approved equal. Any materials or methods used must meet NJDOT standards. This fabric will be installed on a cleaned milled surface in accordance to manufacturer's specifications.

Benches (6' plastisol coated) shall be Wabash Valley Courtyard Series, model no. CY420S, 6' bench with back, slat pattern, dark bronze plastisol and black frame, as distributed by Boyce Associates Inc., or approved equal. (2 Required).

32 gallon plastisol coated steel litter receptacles shall be Wabash Valley Flared Top, model no. FR400R, 32 Gallon, rib design, all black, as distributed by Boyce Associates Inc., or approved equal. (2 Required).

32 gallon liner shall be Wabash Valley model no. LR310. (2 Required).

Litter receptacle tops/lids shall be Wabash Valley model no. FT100N, black for litter and blue for recyclables. (2 Required)

Crack filler shall be an approved fortified acrylic type as manufactured by California Products Corp., Inc., or approved equal, and is to be applied as per manufacture's specifications after cracks have been cleaned.

Crack repair epoxy for large expanded saw cut joints and large cracks shall be True Bond CT, as manufactured by R. C. Davis Company, Inc. or approved equal.

Acrylic leveling/patching compound shall be Court Patch Binder, a product of California Products Corp. or approved equal, and is to be applied as per manufacture's specifications after the surface and cracks have been cleaned and repaired.

Acrylic Resurfacer shall be a California Products Corp. product or approved equal, and is to be applied as per manufacture's specifications after the surface and cracks have been cleaned and repaired.

Color coat surface shall be Plexipave color system, a product of California Products Corp., or approved equal. Plexipave color system specifications for new construction shall be used. In general the color system consists of the following:

A. Acrylic Resurfacer (2 coats)
B. Fortified Plexipave (2 coats)
C. Plexicolor Line Paint: textured white line paint

All materials and methods of application shall conform strictly to the manufacturer's specifications for same. The color of all the court surfaces shall be "Dark Green", with white line striping, and "Velocity Blue" borders, key box, and center circle.

Basketball backboards shall be Jaypro Outdoor Rectangular Steel Basketball Backboard, 850RB-BB.

Basketball goals shall be Jaypro Sports, LLC orange powder coated, heavy duty double rim style, model no. GDR-54 or approved equal. (4 required)

Basketball goal nets shall be Jaypro Sports, LLC heavy duty nylon, model no. JNY-4HP or approved equal. (4 required).

S-29.3 METHODS OF CONSTRUCTION

Remove basket goal to prevent use during rehabilitation.

Clean, sand as necessary, and repaint entire backboards, both front and back with an appropriate metal paint. Paint sample and specifications shall be submitted for approval.

Remove existing concrete bench pads and benches (2).

Mill entire surface of rink 2” thick, removing and disposing of all millings.

All cracks 1/8" and larger, remaining after milling shall be cleaned and filled with novacaulk or an approved acrylic patch binder.

Install petromat paving fabric over the entire court after patching and crack filling is complete.

Pave the entire court with a 2” surface course overlay of bituminous concrete type 12.5M64.

Install new 4’x 12’ concrete bench/litter receptacle pad on each side of center court. Concrete pad shall be 4” thick.

All unacceptable depressions greater than 1/16” and no deeper than 1/2” shall be identified and corrected using an acrylic leveling/patching compound used for patching and correcting defects in asphalt. A depression shall be considered unacceptable if it retains a depth of 1/16” (or greater) of water after a period of ninety minutes at an ambient temperature of 70 degree Fahrenheit.

Topsoil and seed all disturbance, 3’ around court edges, and 3’ around bench pads.

Install color coat system and court lines.

Install benches and litter receptacles (1 bench/1 litter receptacle on each pad).

Install new backboards to the appropriate heights.

Install new basketball goals and nets.

S-30.4 QUANTITY AND PAYMENT

Payment for the rehabilitation of the Holmes Marshall Park basketball courts shall be on a Lump Sum basis as given in the proposal, complete in place. The lump sum bid price shall include furnishing all materials, equipment, tools, machinery, and labor, as well as all excavating, hauling, grading, disposal of millings and debris, repair to any damaged lawn and sidewalk, clean up, and all else necessary to present upon completion of the project rehabilitated basketball courts at Holmes Marshall Park, in accordance with plans, details and specifications.

ARTICLE S-31 REHABILITATION OF TARA PARK TENNIS COURT, (1 COURT) APPROXIMATELY 800 S.Y. (ITEM #19)

S-31.1 DESCRIPTION

This item shall include all necessary labor, materials, machinery, tools, and supplies to rehabilitate the Tara Park tennis court, as shown on the plans, and in accordance with details and specifications.

S-31.2 MATERIALS

Crack filler shall be an approved fortified acrylic type as manufactured by California Products Corp., Inc., or approved equal, and is to be applied as per manufacture's specifications after cracks have been cleaned.

Crack repair epoxy for large expanded saw cut joints shall be True Bond CT, as manufactured by R. C. Davis Company, Inc. or approved equal.

Acrylic leveling/patching compound shall be Court Patch Binder, a product of California Products Corp. or approved equal, and is to be applied as per manufacture's specifications after the surface and cracks have been cleaned and repaired.

Acrylic Resurfacer shall be a California Products Corp. product or approved equal, and is to be applied as per manufacture's specifications after the surface and cracks have been cleaned and repaired.

Color coat surface shall be Plexipave color system, a product of California Products Corp., or approved equal. Plexipave color system specifications for new construction shall be used. In general the color system consists of the following:

A. Acrylic Resurfacer (2 coats)
B. Fortified Plexipave (2 coats)
C. Plexicolor Line Paint: textured white line paint

All materials and methods of application shall conform strictly to the manufacturer's specifications for same. The color of all the court surfaces shall be "Velocity Blue", with white line striping, and "Dark Green" borders.

Tennis net posts - Courtmaster, manufactured by J.A. Cissel Mfg. Co., #244 or approved equal (1 pair required, black).

Tennis net - Courtmaster, manufactured by J.A. Cissel Mfg. Co., #701HVY or approved equal (1 required).

Center Strap - Courtmaster, manufactured by J.A. Cissel Mfg. Co., #753C or approved equal (1 required).

S-31.3 METHODS OF CONSTRUCTION

Remove tennis court hardware and nets.

Saw cut lines shall be filled and sealed with a crack repair epoxy product as specified.

All court cracks shall be repaired using the Armor crack repair system.

All gouges and peeling color coating shall be cleaned and filled with an approved acrylic leveling/patching compound.

All unacceptable depressions greater than 1/16” and no deeper than 1/2” shall be identified and corrected using an acrylic leveling/patching compound used for patching and correcting defects in asphalt. A depression shall be considered unacceptable if it retains a depth of 1/16” (or greater) of water after a period of ninety minutes at an ambient temperature of 70 degree Fahrenheit.

Install color coat system and court lines.

Install new tennis court hardware.

Install new tennis nets and center straps.

S-31.4 QUANTITY AND PAYMENT

Payment for the rehabilitation of the Tara Park tennis court shall be on a Lump Sum basis as given in the proposal, complete in place. The lump sum bid price shall include furnishing all materials, equipment, tools, machinery, labor, grading, disposal of debris, repair to any damaged lawn and sidewalk, clean up, and all else necessary to present upon completion of the project a rehabilitated tennis court at Tara Park, in accordance with plans, details and specifications.

ARTICLE S-32 REHABILITATION OF TARA PARK ½ BASKETBALL COURT, APPROXIMATELY 252 S.Y. (ITEM #20)

S-32.1 DESCRIPTION

This item shall include all necessary labor, materials, machinery, tools, and supplies to rehabilitate the Tara Park ½ basketball court, as shown on the plans, and in accordance with details and specifications.

S-33.2 MATERIALS

Crack repair system is to be Armor crack repair system, as manufactured and distributed by Armor, Farmingdale, NJ 07727 or approved equal. All materials and methods of application shall conform strictly to the manufacturer's specifications for same.

Crack filler shall be an approved fortified acrylic type as manufactured by California Products Corp., Inc., or approved equal, and is to be applied as per manufacture's specifications after cracks have been cleaned.

Acrylic leveling/patching compound shall be Court Patch Binder, a product of California Products Corp. or approved equal, and is to be applied as per manufacture's specifications after the surface and cracks have been cleaned and repaired.

Acrylic Resurfacer shall be a California Products Corp. product or approved equal, and is to be applied as per manufacture's specifications after the surface and cracks have been cleaned and repaired.

Color coat surface shall be Plexipave color system, a product of California Products Corp., or approved equal. Plexipave color system specifications for new construction shall be used. In general the color system consists of the following:

A. Acrylic Resurfacer (2 coats)
B. Fortified Plexipave (2 coats)
C. Plexicolor Line Paint: textured white line paint

All materials and methods of application shall conform strictly to the manufacturer's specifications for same. The color of all the court surfaces shall be "Dark Green", with white line striping, and "Velocity Blue" borders, key box, and center circle.

Basketball goals shall be Jaypro Sports, LLC orange powder coated, heavy duty double rim style, model no. GDR-54 or approved equal. (1 required)

Basketball goal nets shall be Jaypro Sports, LLC heavy duty nylon, model no. JNY-4HP or approved equal. (1 required).

S-32.3 METHODS OF CONSTRUCTION

Remove basket goal to prevent use during rehabilitation.

Clean, sand as necessary, and repaint entire backboards, both front and back with an appropriate metal paint. Paint sample and specifications shall be submitted for approval.

All court cracks shall be repaired using the Armor crack repair system.

All gouges and peeling color coating shall be cleaned and filled with an approved acrylic leveling/patching compound.

All unacceptable depressions greater than 1/16” and no deeper than 1/2” shall be identified and corrected using an acrylic leveling/patching compound used for patching and correcting defects in asphalt. A depression shall be considered unacceptable if it retains a depth of 1/16” (or greater) of water after a period of ninety minutes at an ambient temperature of 70 degree Fahrenheit.

Install color coat system and court lines.

Install new basketball goal and net.

S-32.4 QUANTITY AND PAYMENT

Payment for the rehabilitation of the Tara Park ½ basketball court shall be on a Lump Sum basis as given in the proposal, complete in place. The lump sum bid price shall include furnishing all materials, equipment, tools, machinery, labor, grading, disposal of debris, repair to any damaged lawn and sidewalk, clean up, and all else necessary to present upon completion of the project a rehabilitated basketball court at Tara Park, in accordance with plans, details and specifications.

ARTICLE S-33 REHABILITATION OF WYNNWOOD PARK TENNIS COURTS (2 COURTS), APPROXIMATELY 1,440 S.Y. (ITEM #21)

S-33.1 DESCRIPTION

This item shall include all necessary labor, materials, machinery, tools, and supplies to rehabilitate the Wynnwood Park tennis courts, as shown on the plans, and in accordance with details and specifications.

S-33.2 MATERIALS

Crack repair system is to be Armor crack repair system, as manufactured and distributed by Armor, Farmingdale, NJ 07727 or approved equal. All materials and methods of application shall conform strictly to the manufacturer's specifications for same.

Crack repair epoxy for large expanded saw cut joints shall be True Bond CT, as manufactured by R. C. Davis Company, Inc. or approved equal.

Crack filler shall be an approved fortified acrylic type as manufactured by California Products Corp., Inc., or approved equal, and is to be applied as per manufacture's specifications after cracks have been cleaned.

Acrylic leveling/patching compound shall be Court Patch Binder, a product of California Products Corp. or approved equal, and is to be applied as per manufacture's specifications after the surface and cracks have been cleaned and repaired.

Acrylic Resurfacer shall be a California Products Corp. product or approved equal, and is to be applied as per manufacture's specifications after the surface and cracks have been cleaned and repaired.

Color coat surface shall be Plexipave color system, a product of California Products Corp., or approved equal. Plexipave color system specifications for new construction shall be used. In general the color system consists of the following:

A. Acrylic Resurfacer (2 coats)
B. Fortified Plexipave (2 coats)
C. Plexicolor Line Paint: textured white line paint

All materials and methods of application shall conform strictly to the manufacturer's specifications for same. The color of all the court surfaces shall be "Velocity Blue", with white line striping, and "Dark Green" borders.

Tennis net posts - Courtmaster, manufactured by J.A. Cissel Mfg. Co., #244 or approved equal (2 pair required, black).

Tennis net - Courtmaster, manufactured by J.A. Cissel Mfg. Co., #701HVY or approved equal (2 required).

Center Strap - Courtmaster, manufactured by J.A. Cissel Mfg. Co., #753C or approved equal (2 required).

S-33.3 METHODS OF CONSTRUCTION

Remove tennis court hardware and nets.

Saw cut lines shall be filled and sealed with a crack repair epoxy product as specified.

All court cracks shall be repaired using the Armor crack repair system.

All gouges and peeling color coating shall be cleaned and filled with an approved acrylic leveling/patching compound.

All unacceptable depressions greater than 1/16" and no deeper than 1/2" shall be identified and corrected using an acrylic leveling/patching compound used for patching and correcting defects in asphalt. A depression shall be considered unacceptable if it retains a depth of 1/16" (or greater) of water after a period of ninety minutes at an ambient temperature of 70 degree Fahrenheit.

Install color coat system and court lines.

Install new tennis court hardware.

Install new tennis nets and center straps.

S-33.4 QUANTITY AND PAYMENT

Payment for the rehabilitation of the Wynnwood Park tennis courts shall be on a Lump Sum basis as given in the proposal, complete in place. The lump sum bid price shall include furnishing all materials, equipment, tools, machinery, and labor, grading, disposal of debris, repair to any damaged lawn and sidewalk, clean up, and all else necessary to present upon completion of the project rehabilitated tennis courts at Wynnwood Park, in accordance with plans, details and specifications.

ARTICLE S-34 REHABILITATION OF WYNNWOOD PARK PICKLEBALL COURTS (2 COURTS), APPROXIMATELY 480 S.Y. (ITEM #22)

S-34.1 DESCRIPTION

This item shall include all necessary labor, materials, machinery, tools, and supplies to rehabilitate the Wynnwood Park tennis courts, as shown on the plans, and in accordance with details and specifications.

S-34.2 MATERIALS

Crack repair system is to be Armor crack repair system, as manufactured and distributed by Armor, Farmingdale, NJ 07727 or approved equal. All materials and methods of application shall conform strictly to the manufacturer's specifications for same.

Crack repair epoxy for large expanded saw cut joints shall be True Bond CT, as manufactured by R. C. Davis Company, Inc. or approved equal.

Crack filler shall be an approved fortified acrylic type as manufactured by California Products Corp., Inc., or approved equal, and is to be applied as per manufacture's specifications after cracks have been cleaned.

Acrylic leveling/patching compound shall be Court Patch Binder, a product of California Products Corp. or approved equal, and is to be applied as per manufacture's specifications after the surface and cracks have been cleaned and repaired.

Acrylic Resurfacer shall be a California Products Corp. product or approved equal, and is to be applied as per manufacture's specifications after the surface and cracks have been cleaned and repaired.

Color coat surface shall be Plexipave color system, a product of California Products Corp., or approved equal. Plexipave color system specifications for new construction shall be used. In general the color system consists of the following:

A. Acrylic Resurfacer (2 coats)
B. Fortified Plexipave (2 coats)
C. Plexicolor Line Paint: textured white line paint

All materials and methods of application shall conform strictly to the manufacturer's specifications for same. The color of all the court surfaces shall be "Velocity Blue", with white line striping, and "Dark Green" borders.

Pickleball net - Courtmaster, manufactured by Hartru., #101-727 or approved equal (2 required).

Center Strap - Courtmaster, manufactured by Hartru., #032002 or approved equal (2 required).

S-34.3 METHODS OF CONSTRUCTION

Remove tennis court hardware and nets.

Saw cut lines (if present) shall be filled and sealed with a crack repair epoxy product as specified.

All court cracks shall be repaired using the Armor crack repair system.

All gouges and peeling color coating shall be cleaned and filled with an approved acrylic leveling/patching compound.

All unacceptable depressions greater than 1/16” and no deeper than 1/2” shall be identified and corrected using an acrylic leveling/patching compound used for patching and correcting defects in asphalt. A depression shall be considered unacceptable if it retains a depth of 1/16” (or greater) of water after a period of ninety minutes at an ambient temperature of 70 degree Fahrenheit.

Install color coat system and court lines.

Install pickleball court hardware.

Install new pickleball nets and center straps.

S-34.4 QUANTITY AND PAYMENT

Payment for the rehabilitation of the Wynnwood Park pickleball courts shall be on a Lump Sum basis as given in the proposal, complete in place. The lump sum bid price shall include furnishing all materials, equipment, tools, machinery, and labor, grading, disposal of debris, repair to any damaged lawn and sidewalk, clean up, and all else necessary to present upon completion of the project rehabilitated tennis courts at Wynnwood Park, in accordance with plans, details and specifications.

ARTICLE S-35 REHABILITATION OF WYNNWOOD PARK BASKETBALL COURT, APPROXIMATELY 734 S.Y. (ITEM #23)

S-35.1 DESCRIPTION

This item shall include all necessary labor, materials, machinery, tools, and supplies to rehabilitate the Irishtown Park basketball court, as shown on the plans, and in accordance with details and specifications.

S-35.2 MATERIALS

Crack repair system is to be Armor crack repair system, as manufactured and distributed by Armor, Farmingdale, NJ 07727 or approved equal. All materials and methods of application shall conform strictly to the manufacturer's specifications for same.

Crack filler shall be an approved fortified acrylic type as manufactured by California Products Corp., Inc., or approved equal, and is to be applied as per manufacture's specifications after cracks have been cleaned.

Crack repair epoxy for large expanded saw cut joints and large cracks shall be True Bond CT, as manufactured by R. C. Davis Company, Inc. or approved equal.

Acrylic leveling/patching compound shall be Court Patch Binder, a product of California Products Corp. or approved equal, and is to be applied as per manufacture's specifications after the surface and cracks have been cleaned and repaired.

Acrylic Resurfacer shall be a California Products Corp. product or approved equal, and is to be applied as per manufacture's specifications after the surface and cracks have been cleaned and repaired.

Color coat surface shall be Plexipave color system, a product of California Products Corp., or approved equal. Plexipave color system specifications for new construction shall be used. In general the color system consists of the following:

A. Acrylic Resurfacer (2 coats)
B. Fortified Plexipave (2 coats)
C. Plexicolor Line Paint: textured white line paint

All materials and methods of application shall conform strictly to the manufacturer's specifications for same. The color of all the court surfaces shall be "Dark Green", with white line striping, and "Velocity Blue" borders, key box, and center circle.

Basketball goals shall be Jaypro Sports, LLC orange powder coated, heavy duty double rim style, model no. GDR-54 or approved equal. (2 required)

Basketball goal nets shall be Jaypro Sports, LLC heavy duty nylon, model no. JNY-4HP or approved equal. (2 required).

S-36.3 METHODS OF CONSTRUCTION

Remove basket goals to prevent use during rehabilitation.

Clean, sand as necessary, and repaint entire backboards, both front and back with an appropriate metal paint. Paint sample and specifications shall be submitted for approval.

All court cracks shall be repaired using the Armor crack repair system.

All gouges and peeling color coating shall be cleaned and filled with an approved acrylic leveling/patching compound.

All unacceptable depressions greater than 1/16” and no deeper than 1/2” shall be identified and corrected using an acrylic leveling/patching compound used for patching and correcting defects in asphalt. A depression shall be considered unacceptable if it retains a depth of 1/16” (or greater) of water after a period of ninety minutes at an ambient temperature of 70 degree Fahrenheit.

Install color coat system and court lines.

Install new basketball goals and nets.

S-35.4 QUANTITY AND PAYMENT

Payment for the rehabilitation of the Wynnwood Park basketball court shall be on a Lump Sum basis as given in the proposal, complete in place. The lump sum bid price shall include furnishing all materials, equipment, tools, machinery, and labor, disposal of debris, repair to any damaged lawn and sidewalk, clean up, and all else necessary to present upon completion of the project rehabilitated basketball court at Wynnwood Park, in accordance with plans, details and specifications.

ARTICLE S-36 REMOVE AND REPLACE 10’ HIGH, BLACK VINYL CHAIN LINK FENCE (ITEM #24)

S-36.1 DESCRIPTION

This item shall include all necessary labor, materials, excavation, backfilling, disposal of all existing fence, disposal of excess material, and supplies to remove and replace 10’ high, black vinyl chain link fence with two gates, as shown on the plans and/or as directed by the Township Landscape Architect, in accordance with details and specifications.

S-36.2 MATERIALS

10’ High chain link fencing shall consist of:

A. Black vinyl coated steel chain link fabric, shall be a one and three quarter (1 ¾”) inch square mesh woven of nine (9) finished gauge permafused wire, knuckled selvage top and bottom, one piece top to bottom. The core wires shall be uniformly galvanized with zinc metal in accordance with ASTM A-641-71a. The galvanized wire shall then be coated with a seven (7) mil. coating of PVC applied by the fusion method over a thermoset plastic bonding agent. The bond shall exhibit equal or greater strength than the cohesive strength of the vinyl. All cut ends shall be coated with vinyl at the factory during the weaving process. The minimum breaking strength shall be 1,290 pounds for nine (9) gauge as per ASTM F668, Class 2.

B. End, corner, and line posts to be constructed of 2 1/2" O.D. line and 3” O.D. end/corner, schedule 40, black vinyl coated hot dipped galvanized steel pipe. If existing posts are found to be sound and plumb, they may be sleeved with new posts, ½” diameter greater than the existing posts, with approval by the landscape architect.

C. Top, middle, and bottom rails to be constructed of 1 5/8" O.D. black vinyl coated hot dipped galvanized steel pipe with a structural weight of 2.27 lbs. per ln. ft..

D. Ties to be constructed of black vinyl coated aluminum or galvanized wire every foot of fabric height on line posts and 2 feet apart along rails and braces.

E. Fittings are to be provided for all post tops and junctions for attaching fabric, rails, braces, etc., where necessary. They shall be constructed of black vinyl coated hot dipped galvanized steel.

F. All posts, rails, and component parts shall have black vinyl coatings of ten (10) to fifteen (15) mils thick.

G. Gates shall be constructed of a minimum of 1 5/8” O.D. black vinyl coated hot dipped galvanized steel pipe welded frames, with lockable latches, as shown on the plans. All ex gates are to be replaced.

Portland cement concrete shall attain a minimum compressive strength of 3000 p.s.i. at 28 days.

S-36.3 METHODS OF CONSTRUCTION

Existing 10’ high chain link fence shall be removed and disposed of (approximately 360 L.F. for full Durham Park Courts).

Install new fencing and gates as per the plans and details, and as directed by the Township Landscape Architect.

S-36.4 QUANTITY AND PAYMENT

Payment for removal and replacement of 10’ high, black vinyl chain link fence, shall be per lineal feet removed and replaced, at the price bid in the proposal, and shall include all excavation, removal and disposal of existing fence, materials, gates, connections, backfilling, compaction, disposal of excavation, repair of blacktop, and labor.

ARTICLE S-37 REMOVE AND REPLACE 5’ HIGH, BLACK VINYL CHAIN LINK FENCE (ITEM #24)

S-37.1 DESCRIPTION

This item shall include all necessary labor, materials, excavation, backfilling, disposal of all existing fence, disposal of excess material, and supplies to remove and replace existing 5’ high, black vinyl chain link fence, as shown on the plans and/or as directed by the Township Landscape Architect, in accordance with details and specifications.

S-37.2 MATERIALS

5’ High chain link fencing shall consist of:

A. Black vinyl coated steel chain link fabric, shall be a one and three quarter (2”) inch square mesh woven of nine (9) finished gauge permafused wire, knuckled selvage top and bottom, one piece top to bottom. The core wires shall be uniformly galvanized with zinc metal in accordance with ASTM A-641-71a. The galvanized wire shall then be coated with a seven (7) mil. coating of PVC applied by the fusion method over a thermoset plastic bonding agent. The bond shall exhibit equal or greater strength than the cohesive strength of the vinyl. All cut ends shall be coated with vinyl at the factory during the weaving process. The minimum breaking strength shall be 1,290 pounds for nine (9) gauge as per ASTM F668, Class 2.

B. End, corner, and line posts to be constructed of 2 1/2" O.D. line and 3” O.D. end/corner, schedule 40, black vinyl coated hot dipped galvanized steel pipe. If existing posts are found to be sound and plumb, they may be sleeved with new posts, ½” diameter greater than the existing posts, with approval by the landscape architect.

C. Top, Middle, and bottom rails to be constructed of 1 5/8" O.D. black vinyl coated hot dipped galvanized steel pipe with a structural weight of 2.27 lbs. per ln. ft..

D. Ties to be constructed of black vinyl coated aluminum or galvanized wire every foot of fabric height on line posts and 2 feet apart along rails and braces.

E. Fittings are to be provided for all post tops and junctions for attaching fabric, rails, braces, etc., where necessary. They shall be constructed of black vinyl coated hot dipped galvanized steel.

F. All posts, rails, and component parts shall have black vinyl coatings of ten (10) to fifteen (15) mils thick.

Portland cement concrete shall attain a minimum compressive strength of 3000 p.s.i. at 28 days.

S-37.3 METHODS OF CONSTRUCTION

Existing 5’ high chain link fence shall be removed and disposed of (approximately 200 L.F. for both sides of Holmes Marshal Park Basketball Courts).

Install new fencing as per the plans and details, and as directed by the Township Landscape Architect.

S-37.4 QUANTITY AND PAYMENT

Payment for removal and replacement of 5’ high, black vinyl chain link fence, shall be per lineal feet removed and replaced, at the price bid in the proposal, and shall include all excavation, removal and disposal of existing fence, materials, gates (if required), connections, backfilling, compaction, disposal of excavation, repair of blacktop, and labor.

Bid No: 2022-01-02

THE TOWNSHIP OF PISCATAWAY

PLANS PAGES

Pages 1 of 2

MARIA E. VALENTE-CAEMMERER

Purchasing Agent/Township Secretary

REHABILITATION OF VARIOUS PARK COURTS AND RINKS, 2022

INDEX OF UTILITIES

ELECTRIC
PUBLIC SERVICE ELECTRIC & GAS
268 BALDWIN STREET
NEW BRUNSWICK, N.J. 08902
(732) 246-5755

WATER
ELIZABETHTOWN WATER COMPANY
1341 NORTH AVENUE (P.O. BOX 111)
PLAINFIELD, N.J. 07062
(908) 756-4088 MR. STEVE GRANITE

GAS
PUBLIC SERVICE ELECTRIC & GAS
150 HOW LANE
NEW BRUNSWICK, N.J. 08902
(732) 246-5793

SANITARY SEWER
TOWNSHIP OF PISCATAWAY
PUBLIC WORKS
455 HOES LANE
PISCATAWAY, N.J. 08854
(732) 562-2390

TELEPHONE
NEW JERSEY BELL TELEPHONE
444 GEORGES ROAD
NO. BRUNSWICK, N.J. 08902
(732) 246-9999

NJ ONE CALL
1 CORPORATE PL. SOUTH
SUITE 150
PISCATAWAY, N.J. 08854
(800) 272-1000

CABELVISION
275 CENTENNIAL AVENUE
PISCATAWAY, N.J. 08854
(732) 457-0131

AT&T
OUTSIDE PLANT
P.O. BOX 395
NETCONG, N.J. 07857
(201) 584-9904

● WORK LOCATIONS

KEY MAP
NOT TO SCALE

ESTIMATE OF QUANTITIES

ITEM NO.	DESCRIPTION	CONTRACT QUANTITY	UNITS
1.	Rehabilitation of New Market Park Basketball Court	Lump Sum	L.S.
2.	Rehabilitation of New Market Park Tennis Court	Lump Sum	L.S.
3.	Rehabilitation of Day Park Basketball Courts (2 Courts)	Lump Sum	L.S.
4.	Rehabilitation of Day Park Tennis Courts (2 Courts)	Lump Sum	L.S.
5.	Rehabilitation of Irishtown Park Roller Hockey Rink	Lump Sum	L.S.
6.	Rehabilitation of Irishtown Park Basketball Court	Lump Sum	L.S.
7.	Rehabilitation of Irishtown Park Tennis Court	Lump Sum	L.S.
8.	Rehabilitation of Perrine Park Roller Hockey Rink	Lump Sum	L.S.
9.	Rehabilitation of Perrine Park Tennis Courts (2 Courts)	Lump Sum	L.S.
10.	Rehabilitation of Perrine Park Basketball Court	Lump Sum	L.S.
11.	Rehabilitation of Kroeger Park Basketball Court	Lump Sum	L.S.
12.	Rehabilitation of Kroeger Park Tennis Court	Lump Sum	L.S.
13.	Rehabilitation of Kroeger Park Tennis Court (Ludlow Street)	Lump Sum	L.S.
14.	Rehabilitation of Red Bud Park Park 1/2 Basketball Court	Lump Sum	L.S.
15.	Rehabilitation of School Street Park Basketball Court	Lump Sum	L.S.
16.	Rehabilitation of School Street Park Tennis Courts (2 Courts)	Lump Sum	L.S.
17.	Rehabilitation of Holmes Marshall Park Basketball Courts (2 Courts)	Lump Sum	L.S.
18.	Rehabilitation of Tara Park Tennis Court	Lump Sum	L.S.
19.	Rehabilitation of Tara Park 1/2 Basketball Court	Lump Sum	L.S.
20.	Rehabilitation of Wynnwood Park Tennis Courts (2 Courts)	Lump Sum	L.S.
21.	Rehabilitation of Wynnwood Park Pickle Ball Courts (2 Courts)	Lump Sum	L.S.
22.	Rehabilitation of Wynnwood Park Basketball Court	Lump Sum	L.S.
23.	Remove and Replace 10' High, Black Vinyl Chain Link Fence	360 L.F.	L.F.
24.	Remove and Replace 5' High, Black Vinyl Chain Link Fence	210 L.F.	L.F.

INDEX OF SHEETS

NO.	DESCRIPTION
1.	COVER SHEET, KEY MAP, ESTIMATE OF QUANTITIES, INDEX, UTILITIES, & APPROVALS
2	COURT PLANS

APPROVAL OF THE MUNICIPALITY

HENRY HINTERSTIEN, ASLA 12/6/21
DATE
LANDSCAPE ARCHITECT
LICENSE NO. AS00729

MAYOR BRIAN C. WAHLER 12/6/21
DATE

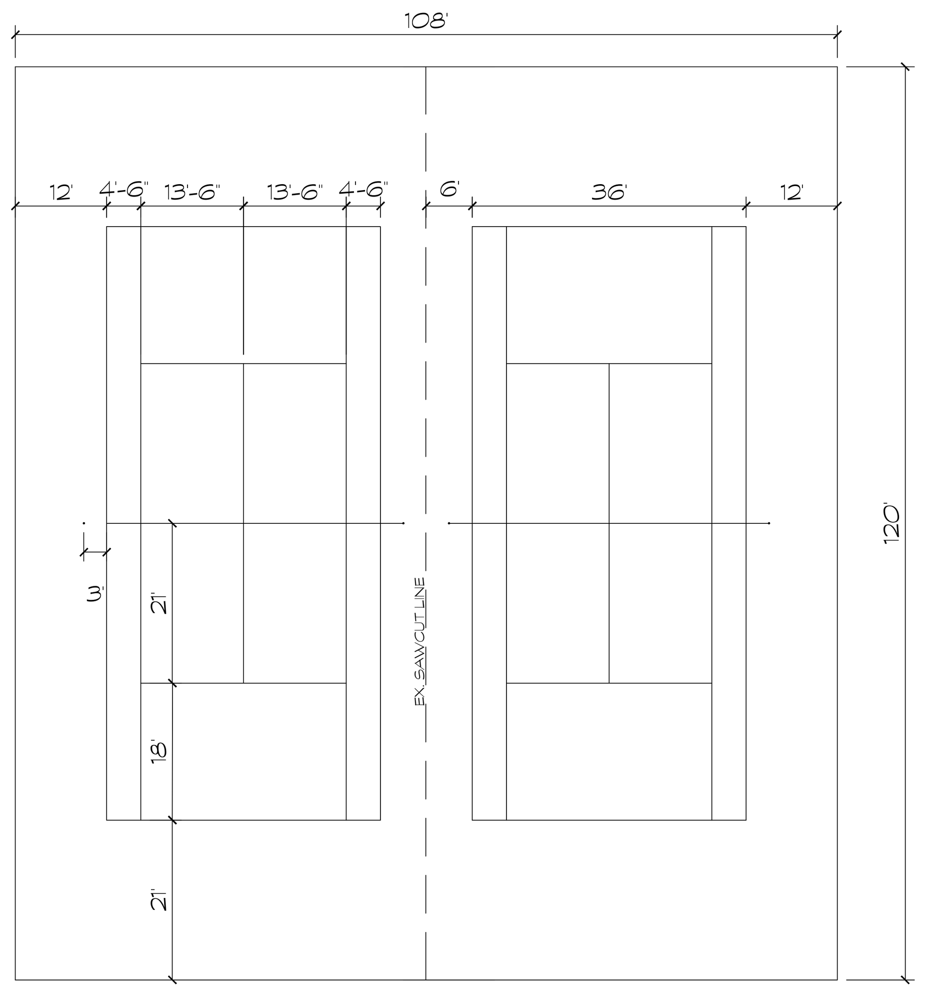

SCHOOL STREET , PERRINE, AND WYNNWOOD PARK TENNIS COURTS
SCALE: 1"= 20'-0"

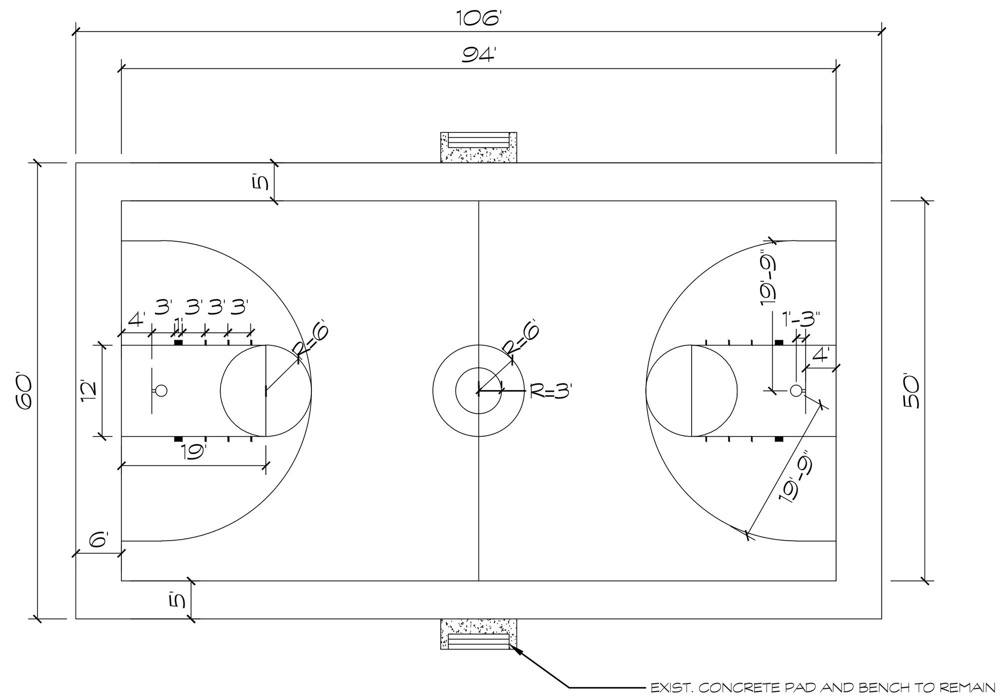

McNEIL PARK/TYPICAL SINGLE BASKETBALL COURT
SCALE: 1"=20'

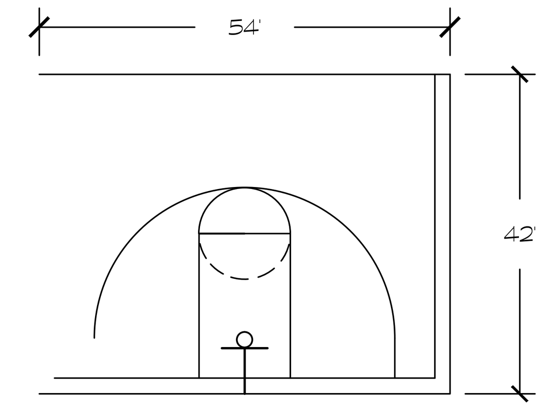

TARA PARK 1/2 BASKETBALL COURT
SCALE: 1" = 20'-0"

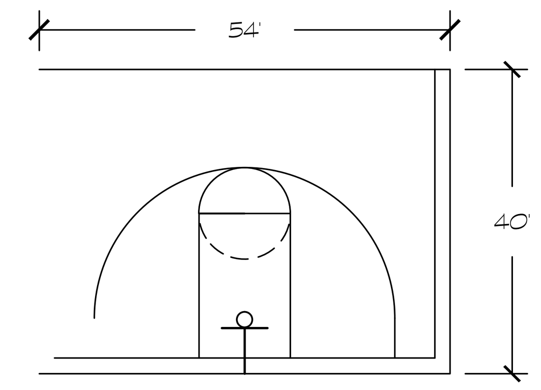

REDBUD PARK 1/2 BASKETBALL COURT
SCALE: 1" = 20'-0"

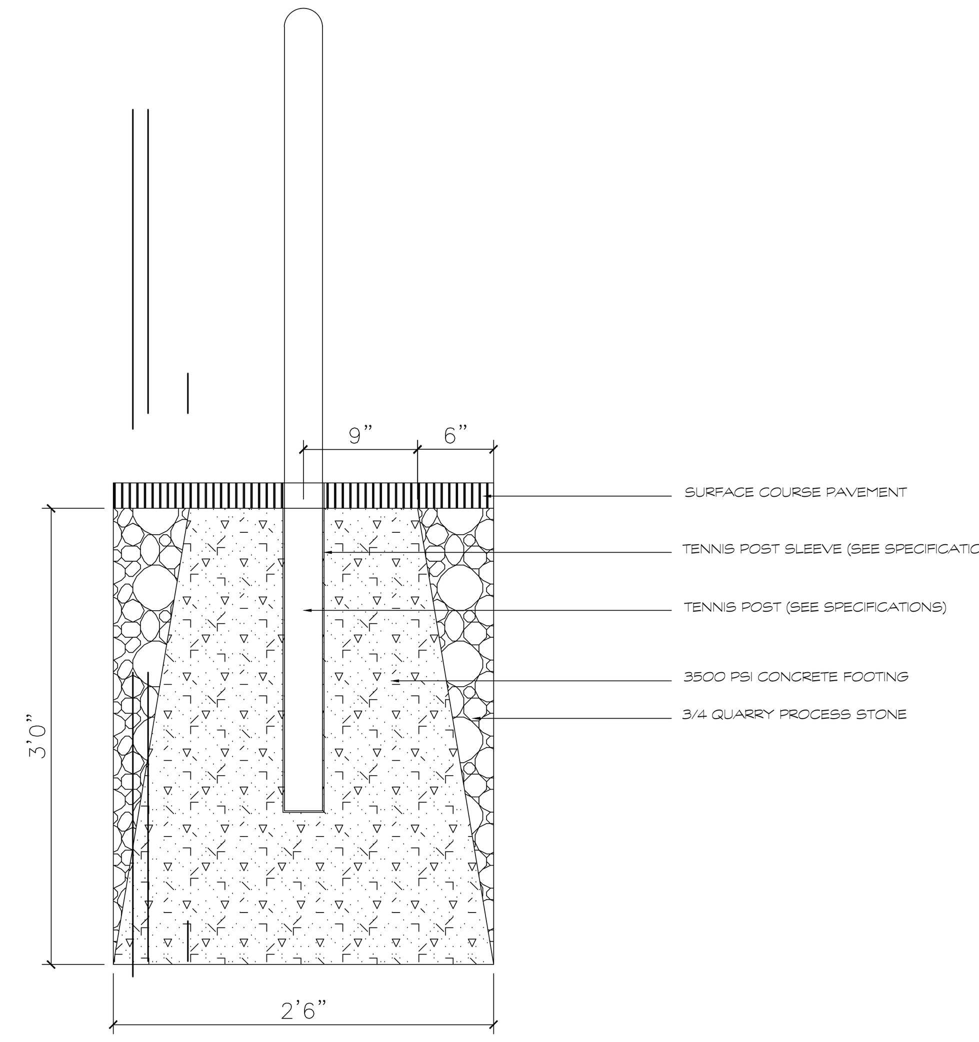

TENNIS NET POST DETAIL
N.T.S.

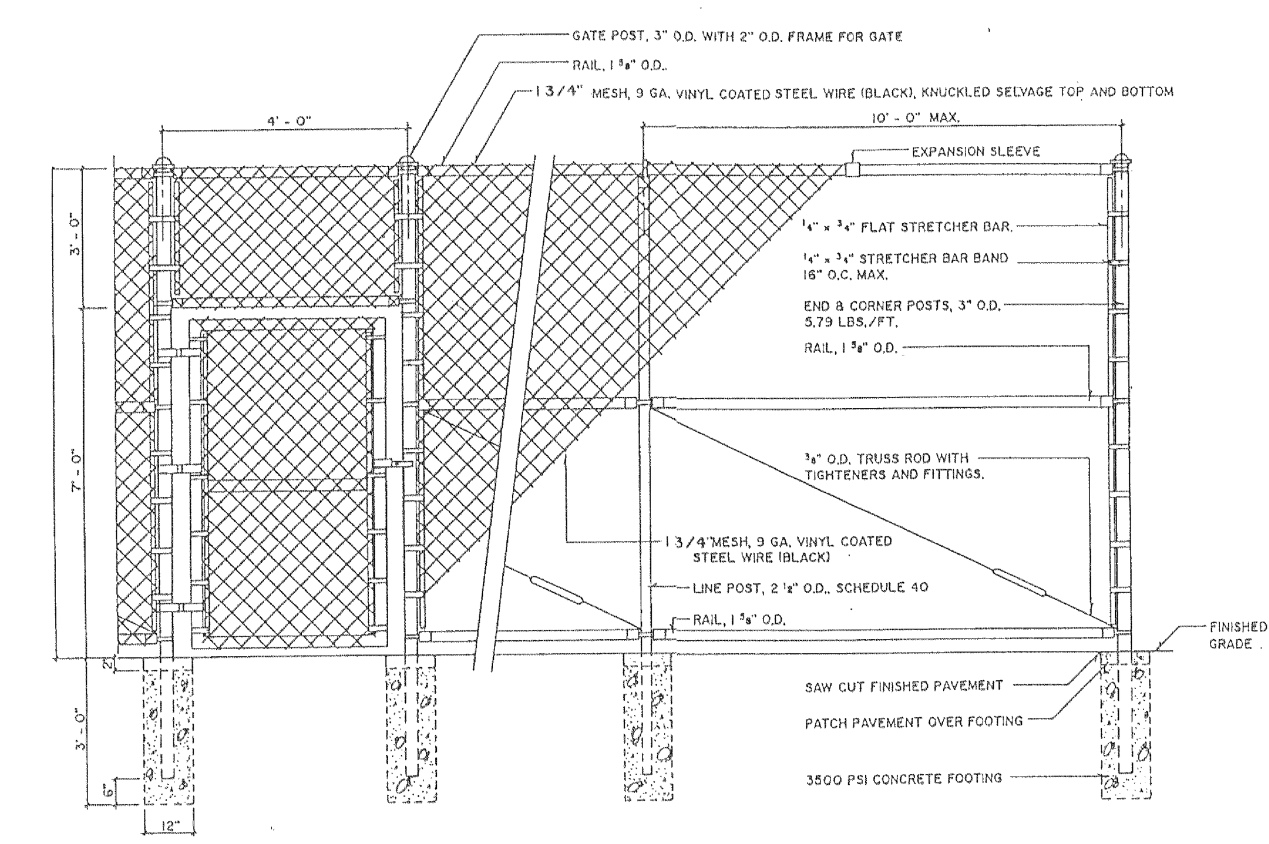

10' HIGH CHAIN LINK FENCE DETAIL
N.T.S.

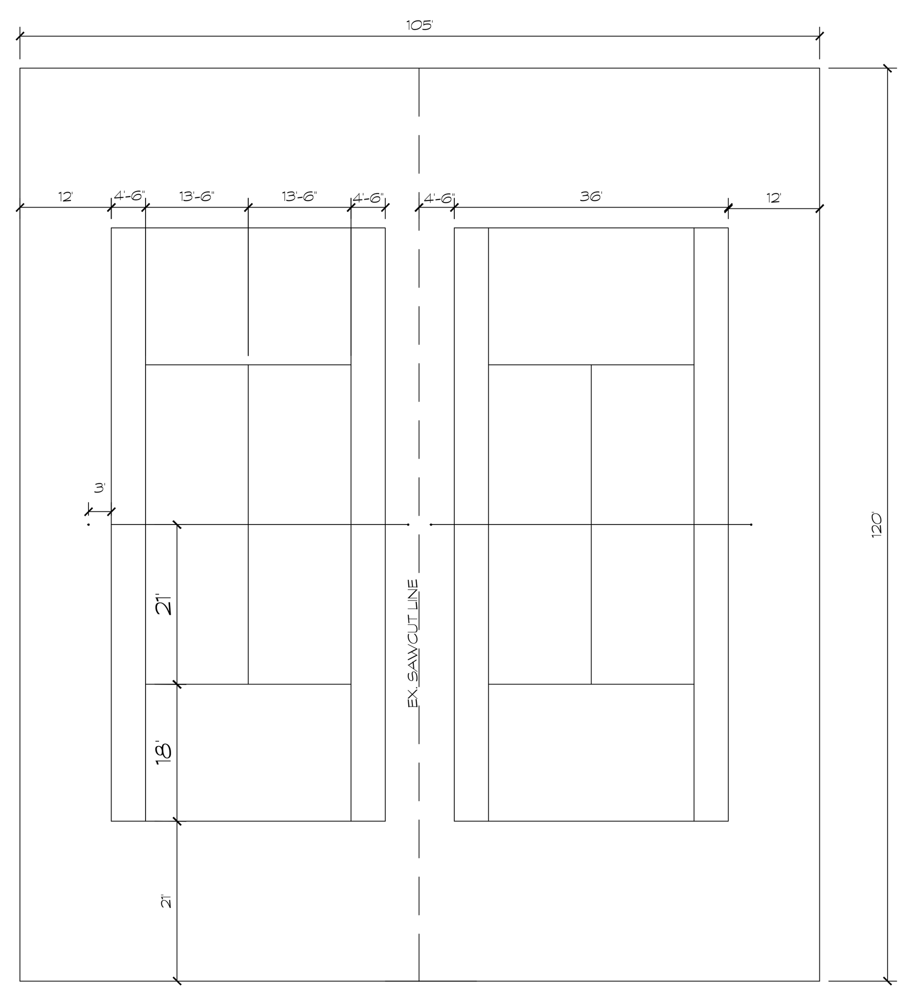

DAY PARK TENNIS COURTS
SCALE: 1" = 20'-0"

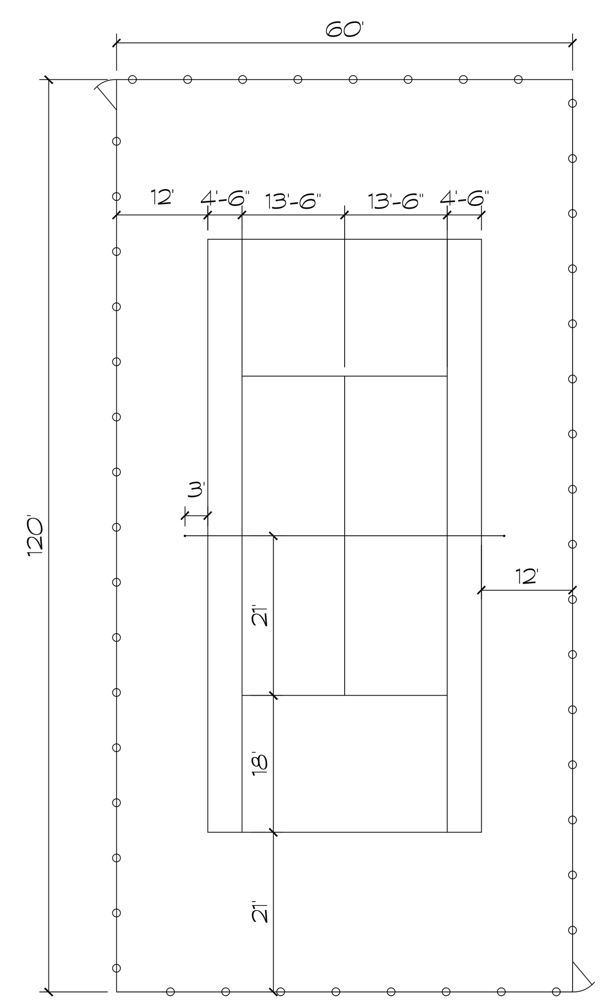

TYPICAL SINGLE TENNIS COURT
SCALE: 1"= 20'-0"

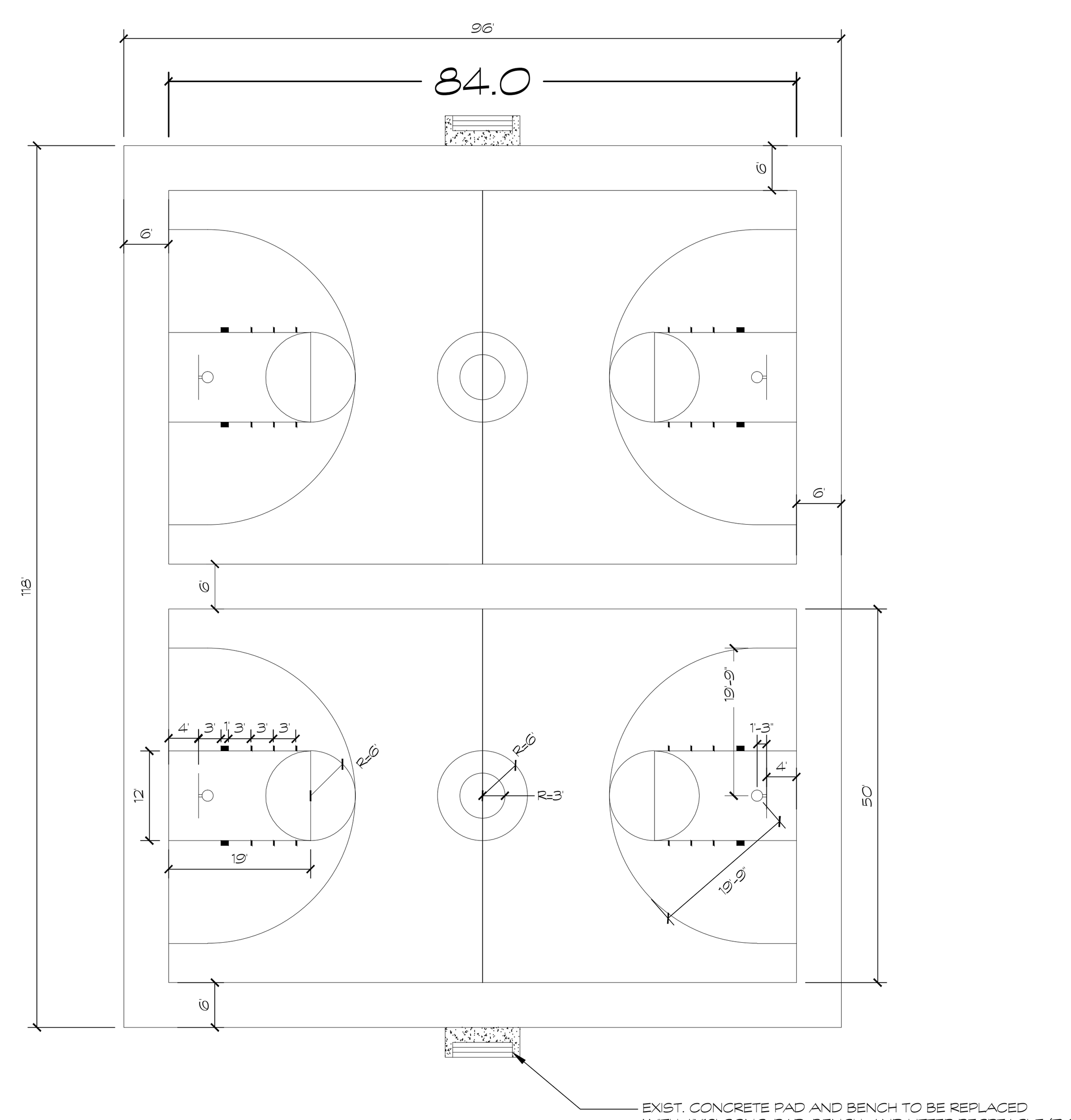

HOLMES MARSHAL/DAY PARK BASKETBALL COURTS
SCALE: 1"=20'

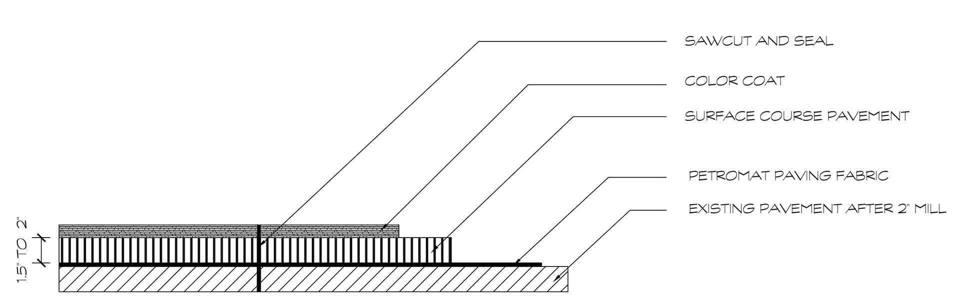

TENNIS/BASKETBALL/RINK COURT PAVING DETAIL
N.T.S.

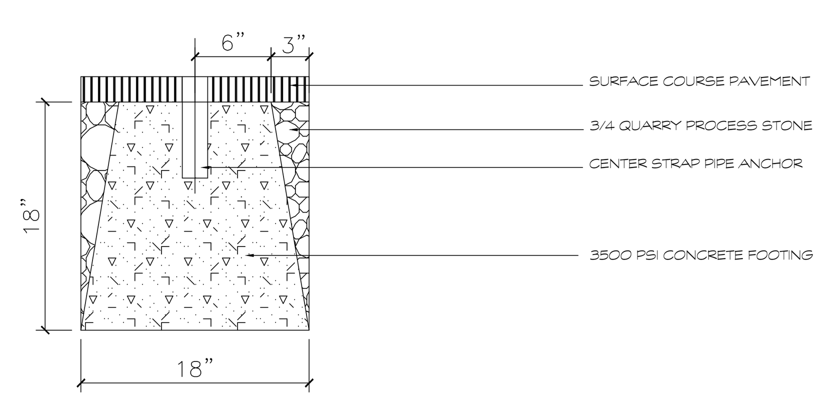

CENTER STRAP ANCHOR DETAIL
N.T.S.

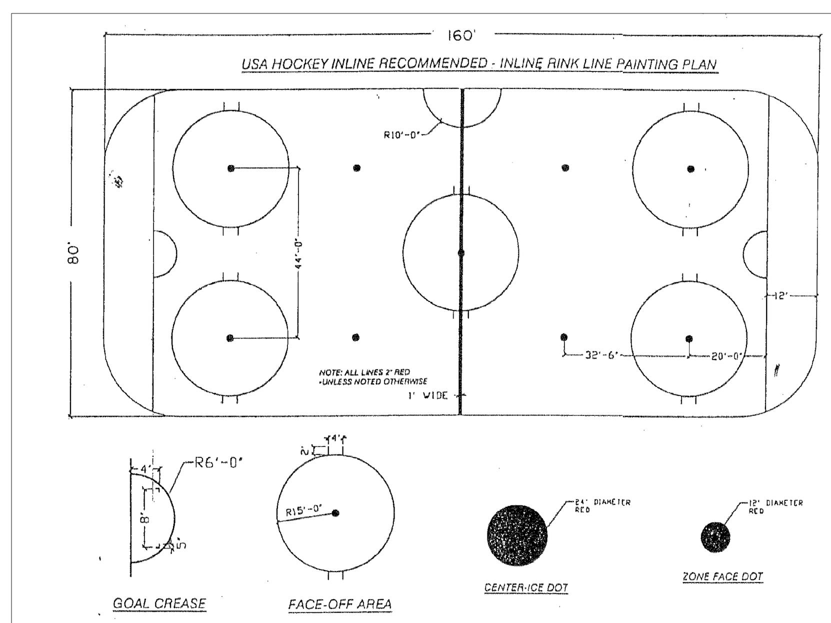

INLINE RINK STRIPING PLAN
N.T.S.

REVISIONS	

HENRY HINTERSTEIN, ASLA
LANDSCAPE ARCHITECT
LICENSE NO. AS00729

12/6/21
DATE

TOWNSHIP OF PISCATAWAY
ENGINEERING DIVISION

REHABILITAITON OF VARIOUS PARK COURTS AND RINKS, 2022

SCALE: AS NOTED		DATE: DEC. 6, 2021	
DRAWN BY:	H.S.H.		MAP NO.
DESIGNED BY:	H.S.H.		
CHECKED BY:	H.S.H.		

SHEET 2 OF 2

Bid No: 2022-0-02-

THE TOWNSHIP OF PISCATAWAY

PROPOSAL SHEETS

Page 1-5

MARIA E. VALENTE-CAEMMERER

Purchasing Agent/Township Secretary

PROPOSAL

Proposed project known as **"REHABILITATION OF VARIOUS PARK COURTS AND RINKS, 2022"**

GENTLEMEN:

The undersigned hereby declare that they have carefully examined the site plans and specifications for the execution of the proposed project known as **"REHABILITATION OF VARIOUS PARK COURTS AND RINKS, 2022",** for which receipt of bid has been advertised, and having examined the Special Instructions to Bidders, plans, and equipment mentioned in the said plans and specifications, for the entire work in the manner prescribed therein, at the unit and lump sum prices specified for the various items below and for the resulting lump sum of project given below.

The undersigned, its representatives, consultants or assistants agree to save the Township of Piscataway, harmless with respect to any claim or claims or liability, which may be incurred by reason or in connection with the performance of said work including, but not limited to blasting work and the existence of open ditches.

It is understood that a certain amount of money will be available for work proposed, and that the actual work to be performed and the materials to be furnished may be increased or decreased to bring the cost of the work within the amount available.

It is further understood that the prices herein bid and the lump sum stated below are to remain firm for a period of 60 days from date.

SCHEDULE OF PRICE
STANDARD ITEMS - BID PRICES

1.	Lump Sum	Rehabilitation of New Market Park Basketball Court, as shown on the plans, and as called for in the specifications, complete in place. $_____._____ Total
2.	Lump Sum	Rehabilitation of New Market Park Tennis Court, as shown on the plans, and as called for in the specifications, complete in place. $_____._____ Total
3.	Lump Sum	Rehabilitation of Day Park Basketball Courts (2 Courts), as shown on the plans, and as called for in the specifications, complete in place. $_____._____ Total

4. Lump Sum Rehabilitation of Day Park Tennis Courts (2 Courts), as shown on the plans, and as called for in the specifications, complete in place.

$_____._____ Total

5. Lump Sum Rehabilitation of Irishtown Park Roller Hockey Rink, as shown on the plans, and as called for in the specifications, complete in place.

$_____._____ Total

6. Lump Sum Rehabilitation of Irishtown Park Basketball Court, as shown on the plans, and as called for in the specifications, complete in place.

$_____._____ Total

7. Lump Sum Rehabilitation of Irishtown Park Tennis Court, as shown on the plans, and as called for in the specifications, complete in place.

$_____._____ Total

8. Lump Sum Rehabilitation of Perrine Park Roller Hockey Rink, as shown on the plans, and as called for in the specifications, complete in place.

$_____._____ Total

9. Lump Sum Rehabilitation of Perrine Park Tennis Courts (2 Courts), as shown on the plans, and as called for in the specifications, complete in place.

$_____._____ Total

10. Lump Sum Rehabilitation of Perrine Park Basketball Court, as shown on the plans, and as called for in the specifications, complete in place.

$_____._____ Total

11. Lump Sum Rehabilitation of Kroeger Park Basketball Court, as shown on the plans, and as called for in the specifications, complete in place.

$_____._____ Total

12. Lump Sum Rehabilitation of Kroeger Park Tennis Court, as shown on the plans, and as called for in the specifications, complete in place.

$_____._____ Total

13. Lump Sum Rehabilitation of Kroeger Park (Ludlow Street) Tennis Court, as shown on the plans, and as called for in the specifications, complete in place.

$_____._____ Total

14. Lump Sum Rehabilitation of Red Bud Park ½ Basketball Court, as shown on the plans, and as called for in the specifications, complete in place.

$_____._____ Total

15. Lump Sum Rehabilitation of School Street Park Basketball Court, as shown on the plans, and as called for in the specifications, complete in place.

$_____._____ Total

16. Lump Sum Rehabilitation of School Street Park Tennis Courts (2 Courts), as shown on the plans, and as called for in the specifications, complete in place.

$_____._____ Total

17. Lump Sum Rehabilitation of Holmes Marshall Park Basketball Courts (2 Courts), as shown on the plans, and as called for in the specifications, complete in place.

$_____._____ Total

18. Lump Sum Rehabilitation of Tara Park Tennis Court, as shown on the plans, and as called for in the specifications, complete in place.

$_____._____ Total

19. Lump Sum Rehabilitation of Tara Park ½ Basketball Court, as shown on the plans, and as called for in the specifications, complete in place.

$_____._____ Total

20. Lump Sum Rehabilitation of Wynnwood Park Tennis Courts (2 Courts), as shown on the plans, and as called for in the specifications, complete in place.

$_____._____ Total

21. Lump Sum Rehabilitation of Wynnwood Park Pickle Ball Courts (2 Courts), as shown on the plans, and as called for in the specifications, complete in place.

$_____._____ Total

22.	Lump Sum	Rehabilitation of Wynnwood Park Basketball Court, as shown on the plans, and as called for in the specifications, complete in place. $_____._____ Total
23.	360 L.F.	Removal and Replacement of 10’ High, Black Vinyl Chain Link Fence, as shown on the plans and details, and as called for in the specifications. $_____._____ L.F. $_____._____ Total
24.	210 L.F.	Removal and Replacement of 5’ High, Black Vinyl Chain Link Fence, as shown on the plans and details, and as called for in the specifications. $_____._____ L.F. $_____._____ Total

TOTAL SUM OF BID ITEMS 1-24 INCLUSIVE $_____

_____

_____

THE WORK UNDER THIS CONTRACT SHALL BE COMPLETED WITHIN 90 CONSECUTIVE CALENDAR DAYS.

Accompanying this Proposal is a Proposal Guaranty in a form of a_____

for the sum of_____$_____
payable to the Township of Piscataway which we hereby agree to be forfeited as liquidated damages

and not as a penalty, if in case the sum_____

_____
is found to be the lowest submitted in the manner required and is accepted by the Township of Piscataway, and if the undersigned shall fail to execute a contract with your Honorable Body under the conditions of this Proposal or to furnish the bond required within the time provided therefore. Otherwise, said guaranty is to be returned to the undersigned.

If the bidder is a corporation or partnership, state name in full.

_____
Bidders must submit prices and proposal security for all items 1 through 24 inclusive.

COMPANY NAME:_____

OFFICER NAME AND TITLE (PRINT):_____

SIGNED:_____

ADDRESS:_____

DATE:_____

TELEPHONE NUMBER:_____

E-MAIL:_____

Bid No. 2022-01-02

THE TOWNSHIP OF PISCATAWAY

"2022-REHABILITATION OF VARIOUS PARK COURTS & RINKS"

BID DOCUMENTS
AND
REQUIRED DOCUMENTATION

All documents in this section shall be completed, signed and submitted with the bid package – Failure to submit the bid documents and other documents so specified may be cause to reject the bid for being non-responsive.

MARIA E. VALENTE-CAEMMERER

Purchasing Agent/Township Secretary

To be completed, signed and returned with Bid

ACKNOWLEDGEMENT OF ADDENDUM

"2022-REHABILITATION OF VARIOUS PARKS COURTS & RINKS"

Bid No. 2022-01-02 **Bid Date. Thursday, January 20, 2022**

The bidder acknowledges receipt of the hereinafter enumerated Addenda which have been issued during period of bidding and agrees that said Addenda shall become a part of this contract. The bidder shall list below the numbers and issuing dates of the Addenda.

ADDENDA NO.	ISSUING DATES
_____	_____
_____	_____
_____	_____
_____	_____

☐ **No Addenda Received**

Name of Company _____

Address _____ P.O. Box _____

City, State, Zip Code _____

Name of Authorized Representative _____

Signature _____ Date _____

BIDDER'S COMMENT FORM

"2022-REHABILITATION OF VARIOUS PARK COURTS & RINKS"

Bid No. 2022-01-02 **Bid Date. Thursday, January 20, 2022**

This form is for Bidder's use in offering voluntary alternates, or other comments intended to afford the Township information or opportunities to improve the quality of the project, without invalidating the bid proposal. It may *not* be used to take exception to specific conditions of the project defined in the contract documents which the Bidder does not like. The bid provided must be based upon the plans and specs, and all contract conditions, as stated. If these documents or conditions contain some untenable item, or extremely expensive provision, for example, to which the Bidder wishes to raise objection, this must be done at the pre-bid meeting, or in writing to the Architect through the question process outlined in the Instructions to Bidders. Such inquiries will have response issued by addendum only, and the resulting decision circulated to all bidders of record. Inquires raised too close to the bid date will not be able to be answered.

_____

_____

_____

_____

_____

_____

_____

_____

_____

Name of Company _____

Address _____

City, State, Zip _____

Name of Authorized Representative _____

Signature _____ Title _____ Date _____

To be completed, signed and returned with Bid

The Township of Piscataway

CONTRACTOR QUESTIONNAIRE/CERTIFICATION

"2022-REHABILITATION OF VARIOUS PARK COURTS & RINKS"

Bid No. 2022-01-02 **Bid Date. Thursday, January 20, 2022**

Name of Company _____

Street Address _____ P.O. Box _____

City, State, Zip _____

Business Phone Number ( )_____ Extension _____

Emergency Phone Number ( )_____

FAX NO. ( )_____ E-Mail _____

FEIN No. _____

Questionnaire

1. How many years have you been engaged in the contracting business under your present firm or trading name?

   _____ Years

2. Have you ever failed to complete any work awarded to your company?

   ☐ Yes ☐ No

   If yes, explain _____

   _____

3. Have you ever defaulted on a contract?

   ☐ Yes ☐ No

   If yes, explain _____

   _____

4. Have you or other principals of your company been debarred, suspended, proposed for debarment, declared ineligible, or voluntary excluded from participation in any public works projects by any federal, state, or local agencies, including any **"prior negative experience** " disqualification pursuant to N.J.S.A. 40A:11-1 et sq.,?

   ☐ Yes ☐ No

If yes, explain _____

_____

(Form continued on next page)

Return With Bid

"2022-REHABILITATION OF VARIOUS PARK COURTS & RINKS"

Bid No. 2022-01-02 **Bid Date. Thursday, January 20, 2022**

_____
Name of Company

Experience – Township:
The Township of Piscataway requires evidence from all bidders that they have completed work or projects of a similar nature as outlined in the bid package. Bidders are to provide evidence of satisfactory completion of work of similar nature as outlined in the bid from _____ (___) Townships in New Jersey within the past _____ (**5**) years. Bidders are to complete the section on experience and provide supporting documentation with the bid package. **As Per Specifications.**

A. Title of Work/Project: _____
Name of Township: _____
Name of School Official: _____ Title _____
Phone Number _____ E-Mail _____
Date(s) of Project: _____

B. Title of Work/Project: _____
Name of Township: _____
Name of School Official: _____ Title _____
Phone Number _____ E-Mail _____
Date(s) of Project: _____

C. Title of Work/Project: _____
Name of Township: _____
Name of School Official: _____ Title _____
Phone Number _____ E-Mail _____
Date(s) of Project: _____

References

Architects--List names of architects that you have worked with on projects within the last five (5) years.

	Firm	Principal	Phone Number
1.			
2.			
3.			

(Form continued on next page)

Return With Bid

"2022-REHABILITATION OF VARIOUS PARK COURTS & RINKS"

Bid No. 2022-01-02 **Bid Date. Thursday, January 20, 2022**

_____
Name of Company

Bank--List name of principal bank with which your company does business.

Bank	Officer	Phone Number

Trade--List names of companies within your trade with which your company does business:

	Firm	Principal	Phone Number
1.			
2.			
3.			

(Form continued on next page)

Contractor Questionnaire/Certification--page 4

"2022-REHABILITATION OF VARIOUS PARK COURTS & RINKS"

Bid No. 2022-01-02 **Bid Date. Thursday, January 20, 2022**

_____
Name of Company

Certifications

- ***Debarment***
  I certify that the entity listed on the form or any person employed by this entity, are not presently on the following:
  - New Jersey Department of Treasury – Consolidated Debarment Report
  - NJ Department of Labor and Workforce Development– Prevailing Wage Debarment List
  - Federal Debarred Vendor List—System for Award Management (SAM.gov)

- ***Direct/Indirect Interests***
  I declare and certify that no member of the Township of Piscataway, nor any officer or employee or person whose salary is payable in whole or in part by said the township or their immediate family members are directly or indirectly interested in this bid or in the supplies, materials, equipment, work or services to which it relates, or in any portion of profits thereof. If a situation so exists where a Township member, employee, officer of the Township has an interest in the bid, etc., then please attach a letter of explanation to this document, duly signed by the president of the firm or company.

- ***Gifts; Gratuities; Compensation***
  I declare and certify that no person from my firm, business, corporation, association or partnership offered or paid any fee, commission or compensation, or offered any gift, gratuity or other thing of value to any school official, Township member or employee of the Township.

- ***Vendor Contributions***
  I declare and certify that I fully understand N.J.A.C. 6A:23A-6.3 (a) (1-4) concerning vendor contributions to school Township members.

- ***False Material Representation/Truth in Contracting***
  I further certify that I understand that it is a crime in the second degree in New Jersey to knowingly make a material representation that is false in connection with the negotiation, award or performance of a government contract. I further acknowledge my understanding of the New Jersey Truth in Contacting Laws.

_____
President or Authorized Agent

_____
Signature

To be completed, signed and returned with Bid

CONTRACTOR REGISTRATION CERTIFICATION

Public Works

"2022-REHABILITATION OF VARIOUS PARK COURTS & RINKS"

Bid No. 2022-01-02 **Bid Date. Thursday, January 20, 2022**

It is the determination of The Township of Piscataway that this is a Public Works project which contract amount in total will exceed $2,000.00 (two thousand dollars), therefore, pursuant to the Public Works Contractor Registration Act -- N.J.S.A. 34:11-56.48 et seq., contractors are to be aware of the following:

No contractor shall bid on any contract for public work as defined in section 2 of P.L.1963, c. 150 (C.34:11-56.26) unless the contractor is registered pursuant to this act. No contractor shall list a subcontractor in a bid proposal for the contract unless the subcontractor is registered pursuant to P.L.1999, c.238 (C.34:11-56.48 et seq.) at the time the bid is made. No contractor or subcontractor, including a subcontractor not listed in the bid proposal, shall engage in the performance of any Public Pork subject to the contract, unless the contractor or subcontractor is registered pursuant to that act.

I certify that our company understands that the project of The Township of Piscataway requires that all contractors and subcontractors listed in this proposal possess a valid Contractor Registration Certificate at the time the proposal is received by the Township and furthermore certify that I will provide copies of the valid certificates prior to the award of contract.

Name of Company_____

Authorized Agent_____ Title_____

Authorized Signature_____

EQUIPMENT CERTIFICATION

"2022-REHABILITATION OF VARIOUS PARK COURTS & RINKS"

Bid No. 2022-01-02 **Bid Date**. **Thursday, January 20, 2022**

In accordance with 40A:11-1 et seq., I hereby certify that

A) _____ *(Name of Company)* owns all the necessary equipment as required by the specifications and to complete the specified Public Work project.

or

B) _____ *(Name of Company)* leases or controls all the necessary equipment as required by the specifications and to complete the specified Public Work project.

PLEASE NOTE: If your company is not the actual owner of the equipment, **you shall submit with the bid**

1. A certificate stating the source from which the equipment will be obtained and
2. Obtain and submit with the bid a certificate from the owner and person in control of the equipment, definitely granting to the bidder the control of the equipment required during such time it may be necessary for the completion of that portion of the contract for which said equipment will be necessary.

Name of Company_____

Authorized Agent_____ Title_____

Authorized Signature_____

Bid No. 2022-01-02

STATE OF NEW JERSEY -- DIVISION OF PURCHASE AND PROPERTY
DISCLOSURE OF INVESTMENT ACTIVITIES IN IRAN

Quote Number: **Bidder/Offeror:**

PART 1: CERTIFICATION
BIDDERS MUST COMPLETE PART 1 BY CHECKING EITHER BOX.
FAILURE TO CHECK ONE OF THE BOXES WILL RENDER THE PROPOSAL NON-RESPONSIVE.

Pursuant to Public Law 2012, c. 25, any person or entity that submits a bid or proposal or otherwise proposes to enter into or renew a contract must complete the certification below to attest, under penalty of perjury, that neither the person or entity, nor any of its parents, subsidiaries, or affiliates, is identified on the Department of Treasury's Chapter 25 list as a person or entity engaging in investment activities in Iran. The Chapter 25 list is found on the Division's website at http://www.state.nj.us/treasury/purchase/pdf/Chapter25List.pdf. Bidders **must** review this list prior to completing the below certification. **Failure to complete the certification will render a bidder's proposal non-responsive**. If the Director finds a person or entity to be in violation of law, s/he shall take action as may be appropriate and provided by law, rule or contract, including but not limited to, imposing sanctions, seeking compliance, recovering damages, declaring the party in default and seeking debarment or suspension of the party

PLEASE CHECK THE APPROPRIATE BOX:

☐ **I certify, pursuant to Public Law 2012, c. 25, that neither the bidder listed above nor any of the bidder's parents, subsidiaries, or affiliates is listed** on the N.J. Department of the Treasury''s list of entities determined to be engaged in prohibited activities in Iran pursuant to P.L. 2012, c. 25 ("Chapter 25 List"). I further certify that I am the person listed above, or I am an officer or representative of the entity listed above and am authorized to make this certification on its behalf. **I will skip Part 2 and sign and complete the Certification below.**

OR

☐ **I am unable to certify as above because the bidder and/or one or more of its parents, subsidiaries, or affiliates is listed on the Department's Chapter 25 list. I will provide a detailed, accurate and precise description of the activities in Part 2 below and sign and complete the Certification below**. Failure to provide such will result in the proposal being rendered as non-responsive and appropriate penalties, fines and/or sanctions will be assessed as provided by law.

PART 2: PLEASE PROVIDE FURTHER INFORMATION RELATED TO INVESTMENT ACTIVITIES IN IRAN
You must provide a detailed, accurate and precise description of the activities of the bidding person/entity, or one of its parents, subsidiaries or affiliates, engaging in the investment activities in Iran outlined above by completing the boxes below.

EACH BOX WILL PROMPT YOU TO PROVIDE INFORMATION RELATIVE TO THE ABOVE QUESTIONS. PLEASE PROVIDE THOROUGH ANSWERS TO EACH QUESTION. IF YOU NEED TO MAKE ADDITIONAL ENTRIES, CLICK THE "ADD AN ADDITIONAL ACTIVITIES ENTRY" BUTTON.

Name Relationship to Bidder/Offeror

Description of Activities

Duration of Engagement Anticipated Cessation Date

Bidder/Offeror Contact Name Contact Phone Number

ADD AN ADDITIONAL ACTIVITIES ENTRY

Certification: I, being duly sworn upon my oath, hereby represent that the foregoing information and any attachments thereto to the best of my knowledge are true and complete. I acknowledge: that I am authorized to execute this certification on behalf of the bidder; that the State of New Jersey is relying on the information contained herein and that I am under a continuing obligation from the date of this certification through the completion of any contracts with the State to notify the State in writing of any changes to the information contained herein; that I am aware that it is a criminal offense to make a false statement or misrepresentation in this certification, and if I do so, I am subject to criminal prosecution under the law and that it will constitute a material breach of my agreement(s) with the State, permitting the State to declare any contract(s) resulting from this certification void and unenforceable.

Full Name (Print): Signature:

Do Not Enter PIN as a Signature

Title: Date:

To be completed, signed and returned with Bid

NON-COLLUSION AFFIDAVIT

"2022-REHABILITATION OF VARIOUS PARK COURTS & RINKS"

Re: Bid Proposal for the Township of Piscataway. **Bid No. 2022-01-02**

STATE OF _____ **Bid Date**. **Thursday, January 20, 2022**

:ss:

COUNTY OF _____

I, _____ of the City of _____

in the County of _____ and the State of _____

of full age, being duly sworn according to law on my oath depose and say that:

I am_____(Position in Company)

of the firm of _____ and the bidder making the Proposal for the above names contract, and that I executed the said Proposal with full authority so to do; that I have not, directly or indirectly, entered into any agreement, participated in any collusion, discussed any or all parts of this proposal with any potential bidder, or otherwise taken any action in restraint of free, competitive bidding in connection with the above named bid, and that all statements contained in said Proposal and in this affidavit are true and correct, and made with full knowledge that the Township of Piscataway relies upon the truth of the statements contained in said Proposal and in the statements contained in this affidavit in awarding the contract for the said bid.

I further warrant that no person or selling agency has been employed or retained to solicit or secure such contract upon an agreement or understanding for a commission, percentage, brokerage or contingent fee, except bona fide employees of bona fide established commercial or selling agencies maintained by

_____

(Print Name of Contractor)

_____

_____

(**SIGNATURE OF CONTRACTOR**)

To be completed, signed and returned with Bid

PRE-QUALIFICATION AFFIDAVIT—NO MATERIAL ADVERSE CHANGE

"2022-REHABILITATION OF VARIOUS PARK COURTS & RINKS"

The below affidavit must be submitted with your bid for projects over $20,000.00 pursuant to N.J.S.A. 40A:11-1 et seq.,

I, _____ of the City of _____

in the County of _____ and the State of _____

of full age, being duly sworn according to law on my oath depose and say that:

No Material Adverse Change in Qualification

I am_____ (*Position in Company*), and the bidder for the above named project. The answers to the following statements are true and correct and that there has been no material adverse change in the qualification information subsequent to the latest statement submitted as required (N.J.S.A. 40A:11-1 et seq.,) as amended, except as set forth herewith. I further certify that there is not now pending any litigation or other action that may jeopardize my rating, status or contract limits from their current limits.

Notice of Classification

_____(Name of Company) is classified by the State of New Jersey under Chapter 105, Laws of 1962, as amended. This Classification became effective _____(Date)

Type of Contract/Trade Classified: _____

_____

Classification Approved Amount $ _____

A copy of my valid and active prequalification/classification certificate from the Department of Treasury, Division of Property Management and Construction has been submitted with this bid.

Total Amount of Uncompleted Contracts

The total amount of uncompleted work is $_____ as of _____ (Date).

A copy of the company's Total Amount of Uncompleted Contracts form is required to be submitted with the bid.

_____ _____

Signature of Authorized Representative Date

This affidavit does not take the place of the "Notice of Classification" or the "Total Amount of Uncompleted Contracts" issued by the State of New Jersey, both of which must be submitted with the bid package of each bidder.

To be completed, signed and returned with Bid

PREVAILING WAGES CERTIFICATION

"2022-REHABILITATION OF VARIOUS PARK COURTS & RINKS"

Bid No. 2022-01-02

It is the determination of the Township of Piscataway that this is a public works project that in total will exceed $2,000.00 (two thousand dollars), therefore prevailing wages rules and regulations apply as promulgated by the New Jersey Prevailing Wage Act and in conformance with N.J.S.A. 34:11-56:25 et seq.

Certification

1. I certify that our company understands that this project of the Township of Piscataway requires prevailing wages to be paid in full accordance with the law.

2. I further certify that all subcontractors named in this bid understand that this project requires the subcontractor to pay prevailing wages in full accordance with the law.

Non-compliance Statement

If it is found that any worker, employed by the contractor or any subcontractor covered by said contract, has been paid a rate of wages less than the prevailing wage required to be paid by such contract, The Township , may begin proceedings to terminate the contractor's or subcontractor's right to proceed with the work, or such part of the work as to which there has been a failure to pay required wages and to prosecute the work to completion or otherwise. The contractor and his sureties shall be liable for any excess costs occasioned thereby to the public body.

NOTIFICATION OF VIOLATIONS – New Jersey Department of Labor and Workforce Development

Has the bidder or any person having an "interest" with the bidder, been notified by the New Jersey Department of Labor and Workforce Development by notice issued pursuant to N.J.S.A. 34:11-56:37 that he/she has been in violation for failure to pay prevailing wages as required by the New Jersey Prevailing Wage Act within the last five (5) years?

* Yes _____ No _____

*If yes, please attach a signed document explaining any/or all administrative proceedings with the Department within the last five (5) years. Please include any pending administrative proceedings with the Department if any.

Submission of Certified Payroll Records

All certified payroll records are to be submitted to the person named below who is coordinating the activities for the project:

_____
Henry Hinterstein/Landscape Architect
The Township of Piscataway

Name of Company_____

Authorized Agent_____

Authorized Signature_____

To be completed, signed and returned with Bid/Proposal

Bid No. 2022-01-02 **STATEMENT OF OWNERSHIP DISCLOSURE**

N.J.S.A. 52:25-24.2 (P.L. 1977, c.33, as amended by P.L. 2016, c.43)

This statement shall be completed, certified to, and included with all bid and proposal submissions. Failure to submit the required information is cause for automatic rejection of the bid or proposal.

Name of Organization: _____

Organization Address: _____

City, State, ZIP: _____

Part I Check the box that represents the type of business organization:

☐ Sole Proprietorship (skip Parts II and III, execute certification in Part IV)

☐ Non-Profit Corporation (skip Parts II and III, execute certification in Part IV)

☐ For-Profit Corporation (any type) ☐ Limited Liability Company (LLC)

☐ Partnership ☐ Limited Partnership ☐ Limited Liability Partnership (LLP)

☐ Other (be specific): _____

Part II Check the appropriate box

☐ The list below contains the names and addresses of all stockholders in the corporation who own 10 percent or more of its stock, of any class, or of all individual partners in the partnership who own a 10 percent or greater interest therein, or of all members in the limited liability company who own a 10 percent or greater interest therein, as the case may be. (**COMPLETE THE LIST BELOW IN THIS SECTION**)

OR

☐ No one stockholder in the corporation owns 10 percent or more of its stock, of any class, or no individual partner in the partnership owns a 10 percent or greater interest therein, or no member in the limited liability company owns a 10 percent or greater interest therein, as the case may be. (**SKIP TO PART IV**)

(Please attach additional sheets if more space is needed):

Name of Individual or Business Entity	Home Address (for Individuals) or Business Address

Part III DISCLOSURE OF 10% OR GREATER OWNERSHIP IN THE STOCKHOLDERS, PARTNERS OR LLC MEMBERS LISTED IN PART II

If a bidder has a direct or indirect parent entity which is publicly traded, and any person holds a 10 percent or greater beneficial interest in the publicly traded parent entity as of the last annual federal Security and Exchange Commission (SEC) or foreign equivalent filing, ownership disclosure can be met by providing links to the website(s) containing the last annual filing(s) with the federal Securities and Exchange Commission (or foreign equivalent) that contain the name and address of each person holding a 10% or greater beneficial interest in the publicly traded parent entity, along with the relevant page numbers of the filing(s) that contain the information on each such person. **Attach additional sheets if more space is needed**.

Website (URL) containing the last annual SEC (or foreign equivalent) filing	Page #'s

Please list the names and addresses of each stockholder, partner or member owning a 10 percent or greater interest in any corresponding corporation, partnership and/or limited liability company (LLC) listed in Part II **other than for any publicly traded parent entities referenced above**. The disclosure shall be continued until names and addresses of every non-corporate stockholder, and individual partner, and member exceeding the 10 percent ownership criteria established pursuant to N.J.S.A. 52:25-24.2 has been listed. **Attach additional sheets if more space is needed.**

Stockholder/Partner/Member and Corresponding Entity Listed in Part II	Home Address (for Individuals) or Business Address

Part IV Certification

I, being duly sworn upon my oath, hereby represent that the foregoing information and any attachments thereto to the best of my knowledge are true and complete. I acknowledge: that I am authorized to execute this certification on behalf of the bidder/proposer; that ***The Township of Piscataway*** is relying on the information contained herein and that I am under a continuing obligation from the date of this certification through the completion of any contracts with The Township of Piscataway to notify The Township of Piscataway in writing of any changes to the information contained herein; that I am aware that it is a criminal offense to make a false statement or misrepresentation in this certification, and if I do so, I am subject to criminal prosecution under the law and that it will constitute a material breach of my agreement(s) with the, permitting The Township of Piscataway to declare any contract(s) resulting from this certification void and unenforceable.

Full Name (Print):		Title:	
Signature:		Date:	

This statement shall be completed, certified to, and included with all bid and proposal submissions. Failure to submit the required information is cause for automatic rejection of the bid or proposal.

To be completed, signed and returned with Bid

SUBCONTRACTOR'S DISCLOSURE FORM

"2022-REHABILITATION OF VARIOUS PARK COURTS & RINKS"

Bid No. 2022-01-02 **Bid Date. Thursday, January 20, 2022**

The _____ *(Name of Bidding Company)*

Please Check One! _____ will sub-contract a portion of this project.
_____ will not sub-contract any portion of this project.

Authorized Agent _____**Title**_____

Signature of Bidder _____**Date**_____

If the bidder is not going to subcontract any portion of this project, the bidder need not complete any further part of this document.

If the bidder will subcontract any of the following:

- Plumbing/gas fitting work;
- Refrigeration/heating/ventilating systems & equipment
- Electrical work, tele-data, fire alarm or security systems
- Structural steel/ornamental iron work

the bidder must do the following:

- Identify the contract number and type of work he intends to subcontract;
- Provide the name, address and other pertinent information about the subcontractor;*
- If the cost of the work by the subcontractor shall exceed the amounts listed below, the bidder shall provide in the bid package submission the following documents:

SUBCONTRACTOR DOCUMENT SUBMISSIONS		
Estimated Value of Contract – Subcontractor	*For Subcontractors in the four major branches listed above*	*For all other Subcontractors*
	Submit With Bid	**Submit Within ten (10 Days of Receipt of Notice of Award**
$2,000 through $5,999	Contractor's Registration Certificate	
$6,000 through $17,499	Contractor's Registration Certificate New Jersey Business Registration Certificate	
$17,500 through $19,999	Contractor's Registration Certificate New Jersey Business Registration Certificate	
$20,000 or more	Contractor's Registration Certificate New Jersey Business Registration Certificate	

Please list subcontractor(s) on the following pages. Bidders may make extra copies of the following pages.

** Failure to identify the names and addresses of any subcontractors required to be named in the bid, or to submit the appropriate documents for each such subcontractor, may be cause for the bid to be rejected as being non-responsive.*

(Form continued on next page)

Subcontractor's Disclosure Statement (Continued) **Return With Bid**

"2022-REHABILITATION OF VARIOUS PARK COURTS & RINKS"

Bid No. 2022-01-02 **Bid Date. Thursday, January 20, 2022**

1. Sub-Contractor for PLUMBING AND GAS FITTING WORK

Name of Subcontracting Company _____

Address _____

City, State, Zip _____

Telephone _____ Fax _____

E-Mail _____ FEIN No:_____

Authorized Agent _____ Title _____

Will the cost of sub-contract exceed $20,000.00?

_____ Yes Estimated Value of Contract $ _____

_____ No Estimated Value of Contract $ _____

If checked **yes**, the sub-contractor must be pre-qualified to perform the work. The bidder must provide in the bid package the following:

- The subcontractor's Notice of Classification;
- The subcontractor's Total Amount of Uncompleted Contracts; and
- Other documents that are required:

SUBCONTRACTOR DOCUMENT SUBMISSIONS		
Estimated Value of Contract – Subcontractor	*For Subcontractors in the four major branches listed above*	*For all other Subcontractors*
	Submit With Bid	**Submit Within ten (10 Days of Receipt of Notice of Award**
$2,000 through $5,999	Contractor's Registration Certificate	
$6,000 through $17,499	Contractor's Registration Certificate New Jersey Business Registration Certificate	
$17,500 through $19,999	Contractor's Registration Certificate New Jersey Business Registration Certificate	
$20,000 or more	Contractor's Registration Certificate New Jersey Business Registration Certificate	

Certification of Equipment

The _____ hereby certifies the above named
Name of Bidding Company

subcontractor has the personnel, equipment, experience, financial and sufficient means to complete their portion of the contract in full accordance with the bid specifications.

_____ _____

Authorized Agent (Print) -- Bidder ***Signature of Authorized Agent—Bidder***

(Form continued on next page)

"2022-REHABILITATION OF VARIOUS PARK COURTS & RINKS"

Bid No. 2022-01-02 **Bid Date. Thursday, January 20, 2022**

2. Sub-Contractor for REFRIGERATION, HEATING & VENTILATING SYSTEMS AND EQUIPMENT

Name of Subcontracting Company _____

Address _____

City, State, Zip _____

Telephone _____ Fax _____

E-Mail _____ FEIN No:_____

Authorized Agent _____ Title _____

Will the cost of sub-contract exceed $20,000.00?

_____ Yes Estimated Value of Contract $ _____

_____ No Estimated Value of Contract $ _____

If checked **yes**, the sub-contractor must be pre-qualified to perform the work. The bidder must provide in the bid package the following:

- The subcontractor's Notice of Classification;
- The subcontractor's Total Amount of Uncompleted Contracts; and
- Other documents that are required:

SUBCONTRACTOR DOCUMENT SUBMISSIONS		
Estimated Value of Contract – Subcontractor	*For Subcontractors in the four major branches listed above*	*For all other Subcontractors*
	Submit With Bid	**Submit Within ten (10 Days of Receipt of Notice of Award**
$2,000 through $5,999	Contractor's Registration Certificate	
$6,000 through $17,499	Contractor's Registration Certificate New Jersey Business Registration Certificate	
$17,500 through $19,999	Contractor's Registration Certificate New Jersey Business Registration Certificate	
$20,000 or more	Contractor's Registration Certificate New Jersey Business Registration Certificate	

Certification of Equipment

The _____ hereby certifies the above named
Name of Bidding Company

subcontractor has the personnel, equipment, experience, financial and sufficient means to complete their portion of the contract in full accordance with the bid specifications.

_____ _____

Authorized Agent (Print) -- Bidder ***Signature of Authorized Agent—Bidder***

(form continued on next page)

Subcontractor's Disclosure Statement (Continued)

Return With Bid

"2022-REHABLILITATION OF VARIOUS PARK COURTS & RINKS"

Bid No. 2022-01-02 **Bid Date. Thursday, January 20, 2022**

3. Sub-Contractor for ELECTRICAL WORK; TELE-DATA, FIRE ALARM OR SECURITY SYSTEMS

Name of Subcontracting Company _____

Address _____

City, State, Zip _____

Telephone _____ Fax _____

E-Mail _____ FEIN No:_____

Authorized Agent _____ Title _____

Will the cost of sub-contract exceed $20,000.00?

_____ Yes Estimated Value of Contract $ _____

_____ No Estimated Value of Contract $ _____

If checked **yes**, the sub-contractor must be pre-qualified to perform the work. The bidder must provide in the bid package the following:

- The subcontractor's Notice of Classification;
- The subcontractor's Total Amount of Uncompleted Contracts; and
- Other documents that are required:

SUBCONTRACTOR DOCUMENT SUBMISSIONS		
Estimated Value of Contract – Subcontractor	*For Subcontractors in the four major branches listed above*	*For all other Subcontractors*
	Submit With Bid	**Submit Within ten (10 Days of Receipt of Notice of Award**
$2,000 through $5,999	Contractor's Registration Certificate	
$6,000 through $17,499	Contractor's Registration Certificate New Jersey Business Registration Certificate	
$17,500 through $19,999	Contractor's Registration Certificate New Jersey Business Registration Certificate	
$20,000 or more	Contractor's Registration Certificate New Jersey Business Registration Certificate	

Certification of Equipment

The _____ hereby certifies the above named
Name of Bidding Company
subcontractor has the personnel, equipment, experience, financial and sufficient means to complete their portion of the contract in full accordance with the bid specifications.

_____ _____

Authorized Agent (Print) -- Bidder ***Signature of Authorized Agent—Bidder***

(form continued on next page)

"2022-REHABILITATION OF VARIOUS PARK COURTS & RINKS"

Bid No. 2022-01-02 **Bid Date. Thursday, January 20, 2022**

4. Sub-Contractor for STRUCTURAL STEEL & IRON WORK

Name of Subcontracting Company _____

Address _____

City, State, Zip _____

Telephone _____ Fax _____

E-Mail _____ FEIN No:_____

Authorized Agent _____ Title _____

Will the cost of sub-contract exceed $20,000.00?

_____ Yes Estimated Value of Contract $ _____

_____ No Estimated Value of Contract $ _____

If checked **yes**, the sub-contractor must be pre-qualified to perform the work. The bidder must provide in the bid package the following:

- The subcontractor's Notice of Classification;
- The subcontractor's Total Amount of Uncompleted Contracts; and
- Other documents that are required:

SUBCONTRACTOR DOCUMENT SUBMISSIONS		
Estimated Value of Contract – Subcontractor	*For Subcontractors in the four major branches listed above*	*For all other Subcontractors*
	Submit With Bid	**Submit Within ten (10 Days of Receipt of Notice of Award**
$2,000 through $5,999	Contractor's Registration Certificate	
$6,000 through $17,499	Contractor's Registration Certificate New Jersey Business Registration Certificate	
$17,500 through $19,999	Contractor's Registration Certificate New Jersey Business Registration Certificate	
$20,000 or more	Contractor's Registration Certificate New Jersey Business Registration Certificate	

Certification of Equipment

The _____ hereby certifies the above named
Name of Bidding Company

subcontractor has the personnel, equipment, experience, financial and sufficient means to complete their portion of the contract in full accordance with the bid specifications.

_____ _____

Authorized Agent (Print) -- Bidder ***Signature of Authorized Agent—Bidder***

(form continued on next page)

To be completed, signed and returned with Bid

(IF APPLICABLE)

Subcontractor's Disclosure Statement
Other Trades
"2022-REHABILITATION OF VARIOUS PARK COURTS & RINKS"

Bid No. 2022-01-02 **Bid Date. Thursday, January 20, 2022**

5. **Name of Trade/Type of Work** _____

Name of Subcontracting Company _____

Address _____

City, State, Zip _____

Telephone _____ Fax _____

E-Mail _____ FEIN No:_____

Authorized Agent _____ Title _____

Will the cost of sub-contract exceed $20,000.00?

_____ Yes Estimated Value of Contract $ _____

_____ No Estimated Value of Contract $ _____

If checked **yes**, the sub-contractor must be pre-qualified to perform the work. The bidder must provide in the bid package the following:

- The subcontractor's Notice of Classification;
- The subcontractor's Total Amount of Uncompleted Contracts; and
- Other documents that are required:

SUBCONTRACTOR DOCUMENT SUBMISSIONS		
Estimated Value of Contract – Subcontractor	*For Subcontractors in the four major branches listed above*	*For all other Subcontractors*
	Submit With Bid	**Submit Within ten (10 Days of Receipt of Notice of Award**
$2,000 through $5,999	Contractor's Registration Certificate	
$6,000 through $17,499	Contractor's Registration Certificate New Jersey Business Registration Certificate	
$17,500 through $19,999	Contractor's Registration Certificate New Jersey Business Registration Certificate	
$20,000 or more	Contractor's Registration Certificate New Jersey Business Registration Certificate	

Certification of Equipment

The _____ hereby certifies the above named
Name of Bidding Company

subcontractor has the personnel, equipment, experience, financial and sufficient means to complete their portion of the contract in full accordance with the bid specifications.

_____ _____

Authorized Agent (Print) -- Bidder ***Signature of Authorized Agent—Bidder***

To be completed, signed and returned with Bid

Bid No. 2022-01-02

Sworn Contractor Certification; Qualifications and Credentials

Pursuant to N.J.S.A. 40A:11-1 et seq., a pre-qualified contractor seeking to bid Township projects, and any subcontractors, that are required to be named under N.J.S.A. 40A:11-1 et seq., shall, as a condition of bidding, submit this Sworn Contractor Certification regarding qualifications and credentials.

I, _____, the principal owner or officer of the company certify that the forging statements are true and our firm has the following qualifications and credentials:

1. A current, valid certificate of registration issued pursuant to "The Public Works Contractor Registration Act," N.J.S.A. 34:11-56:48 et seq. A copy of which is submitted with its bid;

2. A current, valid Certificate of Authority (Business Registration) to perform work in New Jersey issued by the Department of Treasury, a copy of which is submitted with its bid;

3. A current valid contractor trade license required under applicable New Jersey Law for any specialty trade or specialty area in which the firm seeks to perform work, a copy of which is submitted with its bid;

4. During the term of The Township project, I as principal owner or officer of the company or corporation, as contractor, will have in place a suitable quality control and quality assurance program and an appropriate safety and health plan.

Name of Company_____

Name of Owner or Officer_____

Signature of Owner or Officer_____

Bid No. 2022-01-02

AMERICANS WITH DISABILITIES ACT OF 1990
Equal Opportunity for Individuals with Disability

The contractor and The Township of Piscataway (hereafter "owner") do hereby agree that the provisions of Title 11 of the Americans With Disabilities Act of 1990 (the "Act") (42 U.S.C. S121 01 et seq.), which prohibits discrimination on the basis of disability by public entities in all services, programs, and activities provided or made available by public entities, and the rules and regulations promulgated pursuant there unto, are made a part of this contract. In providing any aid, benefit, or service on behalf of the owner pursuant to this contract, the contractor agrees that the performance shall be in strict compliance with the Act. In the event that the contractor, its agents, servants, employees, or subcontractors violate or are alleged to have violated the Act during the performance of this contract, the contractor shall defend the owner in any action or administrative proceeding commenced pursuant to this Act. The contractor shall indemnify, protect, and save harmless the owner, its agents, servants, and employees from and against any and all suits, claims, losses, demands, or damages, of whatever kind or nature arising out of or claimed to arise out of the alleged violation. The contractor shall, at its own expense, appear, defend, and pay any and all charges for legal services and any and all costs and other expenses arising from such action or administrative proceeding or incurred in connection therewith. In any and all complaints brought pursuant to the owner's grievance procedure, the contractor agrees to abide by any decision of the owner which is rendered pursuant to said grievance procedure. If any action or administrative proceeding results in an award of damages against the owner, or if the owner incurs any expense to cure a violation of the ADA which has been brought pursuant to its grievance procedure, the contractor shall satisfy and discharge the same at its own expense.

The owner shall, as soon as practicable after a claim has been made against it, give written notice thereof to the contractor along with full and complete particulars of the claim, If any action or administrative proceeding is brought against the owner or any of its agents, servants, and employees, the *owner shall* expeditiously forward or have forwarded to the contractor every demand, complaint, notice, summons, pleading, or other process received by the owner or its representatives.

It is expressly agreed and understood that any approval by the owner of the services provided by the contractor pursuant to this contract will not relieve the contractor of the obligation to comply with the Act and to defend, indemnify, protect, and save harmless the owner pursuant to this paragraph.

It is further agreed and understood that the owner assumes no obligation to indemnify or save harmless the contractor, its agents, servants, employees and subcontractors for any claim which may arise out of their performance of this Agreement. Furthermore, the contractor expressly understands and agrees that the provisions of this indemnification clause shall in no way limit the contractor's obligations assumed in this Agreement, nor shall they be construed to relieve the contractor from any liability, nor preclude the owner from taking any other actions available to it under any other provisions of the Agreement or otherwise at law.

Name of Company_____

Authorized Agent_____

Title or Position _____

Signature_____ Date_____

EXHIBIT B

MANDATORY EQUAL EMPLOYMENT OPPORTUNITY LANGUAGE
N.J.S.A. 10:5-31 et seq. (P.L.1975, c.127)
N.J.A.C. 17:27-1.1 et seq.
CONSTRUCTION CONTRACTS

During the performance of this contract, the contractor agrees as follows:

The contractor or subcontractor, where applicable, will not discriminate against any employee or applicant for employment because of age, race, creed, color, national origin, ancestry, marital status, affectional or sexual orientation, gender identity or expression, disability, nationality or sex. Except with respect to affectional or sexual orientation and gender identity or expression, the contractor will ensure that equal employment opportunity is afforded to such applicants in recruitment and employment, and that employees are treated during employment, without regard to their age, race, creed, color, national origin, ancestry, marital status, affectional or sexual orientation, gender identity or expression, disability, nationality or sex. Such equal employment opportunity shall include, but not be limited to the following: employment, upgrading, demotion, or transfer; recruitment or recruitment advertising; layoff or termination; rates of pay or other forms of compensation; and selection for training, including apprenticeship. The contractor agrees to post in conspicuous places, available to employees and applicants for employment, notices to be provided by the Public Agency Compliance Officer setting forth provisions of this nondiscrimination clause.

The contractor or subcontractor, where applicable will, in all solicitations or advertisements for employees placed by or on behalf of the contractor, state that all qualified applicants will receive consideration for employment without regard to age, race, creed, color, national origin, ancestry, marital status, affectional or sexual orientation, gender identity or expression, disability, nationality or sex.

The contractor or subcontractor will send to each labor union, with which it has a collective bargaining agreement, a notice, to be provided by the agency contracting officer, advising the labor union or workers' representative of the contractor's commitments under this act and shall post copies of the notice in conspicuous places available to employees and applicants for employment.

The contractor or subcontractor, where applicable, agrees to comply with any regulations promulgated by the Treasurer, pursuant to N.J.S.A. 10:5-31 et seq., as amended and supplemented from time to time and the Americans with Disabilities Act.

When hiring or scheduling workers in each construction trade, the contractor or subcontractor agrees to make good faith efforts to employ minority and women workers in each construction trade consistent with the targeted employment goal prescribed by N.J.A.C. l7:27-7.2; provided, however, that the Dept. of LWD, Construction EEO Monitoring Program, may, in its discretion, exempt a contractor or subcontractor from compliance with the good faith procedures prescribed by the following provisions, A, B, and C, as long as the Dept. of LWD, Construction EEO Monitoring Program is satisfied that the contractor or subcontractor is employing workers provided by a union which provides evidence, in accordance with standards prescribed by the Dept. of LWD, Construction EEO Monitoring Program, that its percentage of active “card carrying” members who are minority and women workers is equal to or greater than the targeted employment goal established in accordance with N.J.A.C. 17:27-7.2. The contractor or subcontractor agrees that a good faith effort shall include compliance with the following procedures:

(A) If the contractor or subcontractor has a referral agreement or arrangement with a union for a construction trade, the contractor or subcontractor shall, within three business days of the contract award, seek assurances from the union that it will cooperate with the contractor or subcontractor as it fulfills its affirmative action obligations under this contract and in accordance with the rules promulgated by the Treasurer pursuant to N.J.S.A. 10:5-31 et. seq., as supplemented and amended from time to time and the Americans with Disabilities Act. If the contractor or subcontractor is unable to obtain said assurances from the construction trade union at least five business days prior to the commencement of construction work, the contractor or subcontractor agrees to afford equal employment opportunities minority and women workers directly, consistent with this chapter. If the contractor's or subcontractor's prior experience with a construction trade union, regardless of whether the union has provided said assurances, indicates a significant possibility that the trade union will not refer sufficient minority and women workers consistent with affording equal employment opportunities as specified in this chapter, the contractor or subcontractor agrees to be prepared to provide such opportunities to minority and women workers directly, consistent with this chapter, by complying with the hiring or scheduling procedures prescribed under (B) below; and the contractor or subcontractor further agrees to take said action immediately if it determines that the union is not referring minority and women workers consistent with the equal employment opportunity goals set forth in this chapter.

(B) If good faith efforts to meet targeted employment goals have not or cannot be met for each construction trade by adhering to the procedures of (A) above, or if the contractor does not have a referral agreement or arrangement with a union for a construction trade, the contractor or subcontractor agrees to take the following actions:

(l) To notify the public agency compliance officer, the Dept. of LWD, Construction EEO Monitoring Program, and minority and women referral organizations listed by the Division pursuant to N.J.A.C. 17:27-5.3, of its workforce needs, and request referral of minority and women workers;

(2) To notify any minority and women workers who have been listed with it as awaiting available vacancies;

(3) Prior to commencement of work, to request that the local construction trade union refer minority and women workers to fill job openings, provided the contractor or subcontractor has a referral agreement or arrangement with a union for the construction trade;

(4) To leave standing requests for additional referral to minority and women workers with the local construction trade union, provided the contractor or subcontractor has a referral agreement or arrangement with a union for the construction trade, the State Training and Employment Service and other approved referral sources in the area;

(5) If it is necessary to lay off some of the workers in a given trade on the construction site, layoffs shall be conducted in compliance with the equal employment opportunity and nondiscrimination standards set forth in this regulation, as well as with applicable Federal and State court decisions;

(6) To adhere to the following procedure when minority and women workers apply or are referred to the contractor or subcontractor:

(i) The contactor or subcontractor shall interview the referred minority or women worker.

(ii) If said individuals have never previously received any document or certification signifying a level of qualification lower than that required in order to perform the work of the construction trade, the contractor or subcontractor shall in good faith determine the qualifications of such individuals. The contractor or subcontractor shall hire or schedule those individuals who satisfy appropriate qualification standards in conformity with the equal employment opportunity and non-discrimination principles set forth in this chapter. However, a contractor or subcontractor shall determine that the individual at least possesses the requisite skills, and experience recognized by a union, apprentice program or a referral agency, provided the referral agency is acceptable to the Dept. of LWD, Construction EEO Monitoring Program. If necessary, the contractor or subcontractor shall hire or schedule minority and women workers who qualify as trainees pursuant to these rules. All of the requirements, however, are limited by the provisions of (C) below.

(iii) The name of any interested women or minority individual shall be maintained on a waiting list, and shall be considered for employment as described in (i) above, whenever vacancies occur. At the request of the Dept. of LWD, Construction EEO Monitoring Program, the contractor or subcontractor shall provide evidence of its good faith efforts to employ women and minorities from the list to fill vacancies.

(iv) If, for any reason, said contractor or subcontractor determines that a minority individual or a woman is not qualified or if the individual qualifies as an advanced trainee or apprentice, the contractor or subcontractor shall inform the individual in writing of the reasons for the determination, maintain a copy of the determination in its files, and send a copy to the public agency compliance officer and to the Dept. of LWD, Construction EEO Monitoring Program.

(7) To keep a complete and accurate record of all requests made for the referral of workers in any trade covered by the contract, on forms made available by the Dept. of LWD, Construction EEO Monitoring Program and submitted promptly to the Dept. of LWD, Construction EEO Monitoring Program upon request.

(C) The contractor or subcontractor agrees that nothing contained in (B) above shall preclude the contractor or subcontractor from complying with the union hiring hall or apprenticeship policies in any applicable collective bargaining agreement or union hiring hall arrangement, and, where required by custom or agreement, it shall send journeymen and trainees to the union for referral, or to the apprenticeship program for admission, pursuant to such agreement or arrangement. However, where the practices of a union or apprenticeship program will result in the exclusion of minorities and women or the failure to refer minorities and women consistent with the targeted county employment goal, the contractor or subcontractor shall consider for employment persons referred pursuant to (B) above without regard to such agreement or arrangement; provided further, however, that the contractor or subcontractor shall not be required to employ women and minority advanced trainees and trainees in numbers which result in the employment of advanced trainees and trainees as a percentage of the total workforce for the construction trade, which percentage significantly exceeds the apprentice to journey worker ratio specified in the applicable collective bargaining agreement, or in the absence of a collective bargaining agreement, exceeds the ratio established by practice in the area for said construction trade. Also, the contractor or subcontractor agrees that, in implementing the procedures of (B) above, it shall, where applicable, employ minority and women workers residing within the geographical jurisdiction of the union.

After notification of award, but prior to signing a construction contract, the contractor shall submit to the public agency compliance officer and the Dept. of LWD, Construction EEO Monitoring Program an initial project workforce report (Form AA-201) electronically provided to the public agency by the Dept. of LWD, Construction EEO Monitoring Program, through its website, for distribution to and completion by the contractor, in accordance with N.J.A.C. 17:27-7. The contractor also agrees to submit a copy of the Monthly Project Workforce Report once a month thereafter for the duration of this contract to the Dept. of LWD, Construction EEO Monitoring Program, and to the public agency compliance officer.

The contractor agrees to cooperate with the public agency in the payment of budgeted funds, as is necessary, for on-the-job and/or off-the job programs for outreach and training of minorities and women.

(D) The contractor and its subcontractors shall furnish such reports or other documents to the Dept. of LWD, Construction EEO Monitoring Program as may be requested by the Dept. of LWD, Construction EEO Monitoring Program from time to time in order to carry out the purposes of these regulations, and public agencies shall furnish such information as may be requested by the Dept. of LWD, Construction EEO Monitoring Program for conducting a compliance investigation pursuant to N.J.A.C. 17:27-1.1 et seq.

(Revised: January, 2016)

(Revised: January, 2016)

)

DATED:_____

COMPANY NAME: _____

ADDRESS:_____

TITLE: _____

PRINTED NAME_____

SIGNATURE:_____ _____

C. 271 POLITICAL CONTRIBUTION DISCLOSURE FORM

Public Agency Instructions

This page provides guidance to public agencies entering into contracts with business entities that are required to file Political Contribution Disclosure forms with the agency. **It is not intended to be provided to contractors.** What follows are instructions on the use of form local units can provide to contractors that are required to disclose political contributions pursuant to N.J.S.A. 19:44A-20.26 (P.L. 2005, c. 271, s.2). Additional information on the process is available in Local Finance Notice 2006-1 (www.nj.gov/dca/lgs/lfns/lfnmenu.shtml).

1. The disclosure is required for all contracts in excess of $17,500 that are **not awarded** pursuant to a "fair and open" process (N.J.S.A. 19:44A-20.7).
2. Due to the potential length of some contractor submissions, the public agency should consider allowing data to be submitted in electronic form (i.e., spreadsheet, pdf file, etc.). Submissions must be kept with the contract documents or in an appropriate computer file and be available for public access. **The form is worded to accept this alternate submission.** The text should be amended if electronic submission will not be allowed.
3. The submission must be **received from the contractor and** on file at least 10 days prior to award of the contract. Resolutions of award should reflect that the disclosure has been received and is on file.
4. The contractor must disclose contributions made to candidate and party committees covering a wide range of public agencies, including all public agencies that have elected officials in the county of the public agency, state legislative positions, and various state entities. The Division of Local Government Services recommends that contractors be provided a list of the affected agencies. This will assist contractors in determining the campaign and political committees of the officials and candidates affected by the disclosure.
    a. The Division has prepared model disclosure forms for each county. They can be downloaded from the "County PCD Forms" link on the Pay-to-Play web site at www.nj.gov/dca/lgs/p2p. They will be updated from time-to-time as necessary.
    b. A public agency using these forms **should edit them to properly reflect the correct legislative district**(s). As the forms are county-based, **they list all legislative districts** in each county. **Districts that do not represent the public agency should be removed from the lists.**
    c. Some contractors may find it easier to provide a single list that covers all contributions, regardless of the county. These submissions are appropriate and should be accepted.
    d. The form may be used "as-is", subject to edits as described herein.
    e. The "Contractor Instructions" sheet is intended to be provided with the form. It is recommended that the Instructions and the form be printed on the same piece of paper. The form notes that the Instructions are printed on the back of the form; where that is not the case, the text should be edited accordingly.
    f. The form is a Word document and can be edited to meet local needs, and posted for download on web sites, used as an e-mail attachment, or provided as a printed document.
5. It is recommended that the contractor also complete a "Stockholder Disclosure Certification." This will assist the local unit in its obligation to ensure that contractor did not make any prohibited contributions to the committees listed on the Business Entity Disclosure Certification in the 12 months prior to the contract. (See Local Finance Notice 2006-7 for additional

information on this obligation) A sample Certification form is part of this package and the instruction to complete it is included in the Contractor Instructions. **NOTE: This section is not applicable to Boards of Education.**

C. 271 POLITICAL CONTRIBUTION DISCLOSURE FORM

Contractor Instructions

Business entities (contractors) receiving contracts from a public agency that are NOT awarded pursuant to a "fair and open" process (defined at N.J.S.A. 19:44A-20.7) are subject to the provisions of P.L. 2005, c. 271, s.2 (N.J.S.A. 19:44A-20.26). This law provides that 10 days prior to the award of such a contract, the contractor shall disclose contributions to:

- any State, county, or municipal committee of a political party
- any legislative leadership committee*
- any continuing political committee (a.k.a., political action committee)
- any candidate committee of a candidate for, or holder of, an elective office:
  - of the public entity awarding the contract
  - of that county in which that public entity is located
  - of another public entity within that county
  - or of a legislative district in which that public entity is located or, when the public entity is a county, of any legislative district which includes all or part of the county

The disclosure must list reportable contributions to any of the committees that exceed $300 per election cycle that were made during the 12 months prior to award of the contract. See N.J.S.A. 19:44A-8 and 19:44A-16 for more details on reportable contributions.

N.J.S.A. 19:44A-20.26 itemizes the parties from whom contributions must be disclosed when a business entity is not a natural person. This includes the following:

- individuals with an "interest" ownership or control of more than 10% of the profits or assets of a business entity or 10% of the stock in the case of a business entity that is a corporation for profit
- all principals, partners, officers, or directors of the business entity or their spouses
- any subsidiaries directly or indirectly controlled by the business entity
- IRS Code Section 527 New Jersey based organizations, directly or indirectly controlled by the business entity and filing as continuing political committees, (PACs).

When the business entity is a natural person, "a contribution by that person's spouse or child, residing therewith, shall be deemed to be a contribution by the business entity." [N.J.S.A. 19:44A-20.26(b)] The contributor must be listed on the disclosure.

Any business entity that fails to comply with the disclosure provisions shall be subject to a fine imposed by ELEC in an amount to be determined by the Commission which may be based upon the amount that the business entity failed to report.

The enclosed list of agencies is provided to assist the contractor in identifying those public agencies whose elected official and/or candidate campaign committees are affected by the disclosure requirement. It is the contractor's responsibility to identify the specific committees to which contributions may have been made and need to be disclosed. The disclosed information may exceed the minimum requirement.

The enclosed form, a content-consistent facsimile, or an electronic data file containing the required details (along with a signed cover sheet) may be used as the contractor's submission and is disclosable to the public under the Open Public Records Act.

The contractor must also complete the attached Stockholder Disclosure Certification. This will assist the agency in meeting its obligations under the law. **NOTE: This section does not apply to Board of Education contracts.**

[*] N.J.S.A. 19:44A-3(s): "The term "legislative leadership committee" means a committee established, authorized to be established, or designated by the President of the Senate, the Minority Leader of the Senate, the Speaker of the General Assembly or the Minority Leader of the General Assembly pursuant to section 16 of P.L.1993, c.65 (C.19:44A-10.1) for the purpose of receiving contributions and making expenditures."

C. 271 POLITICAL CONTRIBUTION DISCLOSURE FORM

Required Pursuant To N.J.S.A. 19:44A-20.26

This form or its permitted facsimile must be submitted to the local unit no later than 10 days prior to the award of the contract.

Part I – Vendor Information

Vendor Name:			
Address:			
City:		State:	Zip:

The undersigned being authorized to certify, hereby certifies that the submission provided herein represents compliance with the provisions of N.J.S.A. 19:44A-20.26 and as represented by the Instructions accompanying this form.

Signature	Printed Name	Title

Part II – Contribution Disclosure

Disclosure requirement: Pursuant to N.J.S.A. 19:44A-20.26 this disclosure must include all reportable political contributions (more than $300 per election cycle) over the 12 months prior to submission to the committees of the government entities listed on the form provided by the local unit.

☐ Check here if disclosure is provided in electronic form.

Contributor Name	Recipient Name	Date	Dollar Amount
			$

☐ Check here if the information is continued on subsequent page(s)

Continuation Page

C. 271 POLITICAL CONTRIBUTION DISCLOSURE FORM

Required Pursuant To N.J.S.A. 19:44A-20.26

Page ___ of ______

Vendor Name:

Contributor Name	Recipient Name	Date	Dollar Amount
			$

☐ Check here if the information is continued on subsequent page(s)

List of Agencies with Elected Officials Required for Political Contribution Disclosure
N.J.S.A. 19:44A-20.26

County Name:

State: Governor, and Legislative Leadership Committees

Legislative District #s:

State Senator and two members of the General Assembly per district.

County:

Freeholders	County Clerk	Sheriff
{County Executive}	Surrogate	

Municipalities (Mayor and members of governing body, regardless of title):

USERS SHOULD CREATE THEIR OWN FORM, OR DOWNLOAD FROM WWW.NJ.GOV/DCA/LGS/P2P A COUNTY-BASED, CUSTOMIZABLE FORM.

BID BOND

BOND NO. _____

KNOW ALL MEN BY THESE PRESENTS, That we, _____ as Principal, and _____, a corporation duly organized under the laws of the State of _____, as Surety, are held and firmly bound unto the Township of Piscataway as Obligee, in the sum of Ten Percent (10%) of the Total Bid, Not to Exceed Twenty Thousand Dollars ($20,000.00) for the payment of which Principal and Surety Bind ourselves, our heirs, executors, administrators, successors and assigns, jointly and severally.

WHEREAS, Principal has submitted a bid for _____, the "Project."

NOW, THEREFORE, if the Obligee shall make any award according to the terms of said bid and the Principal shall enter into a contract with said Obligee in accordance with the terms of said bid and give bond for the faithful performance thereof within the time specified; or if no time is specified within thirty days after the date of said award; or if the Principal shall, in the case of failure so to do, shall pay to the Obligee the difference, not to exceed the amount of this Bond, between the amount specified in bid and such larger amount for which the Obligee may in good faith contract with another party to perform the work covered by said bid, then this obligation shall be null and void: otherwise to remain in full force and effect.

Signed and sealed this __ day of _____, 20__

Surety: _____

By: _____

Witness: _____

Principal: _____

By: _____

Witness: _____

Bid No. 2022-01-02

PLAN, EXPERIENCE AND EQUIPMENT QUESTIONNAIRE

Submitted to _____

By_____)A Corporation
)A Copartnership
)An Individual

Principal Office _____

The signatory of this questionnaire guarantees the truth and accuracy of all statements and of all answers to interrogatories hereinafter made.

1) In what manner have you inspected the proposed work? (explain in detail)

_____

_____

_____

2) Explain your plan or layout for performing the proposed work.

_____

_____

_____

3) The work, if awarded to you, will have the personal supervision of whom?

_____

4.1) How many years has your organization been in business under your present name?

_____

4.2) Have you ever failed to complete any work awarded to you? Yes_____No_____
(If yes, attach additional sheet with details and explanation.)

5) Do you intend to sublet any portion(s) of this work? Yes____No_____
If yes, state amount of sub-contract, and if known, the name and address of the sub-contractor, amount and type of his equipment and financial responsibility.

6.) What equipment do you own that is available for and intended to be used on the present project?

QUANTITY	ITEM	DESCRIPTION, SIZE, CAPACITY, ETC	CONDITION	YEARS OF SERVICE	PRESENT LOCATION

7.) What equipment do you intend to purchase or lease for use on the proposed work, should the contract be awarded to you?

QUANTITY	ITEM	DESCRIPTION, SIZE, CAPACITY, ETC	APPROXIMATE COST	
			PURCHASE	LEASE

8) Have you made contracts or received firm offers for all materials prices used in preparing your proposal ? Yes_____No_____**Do not** give names of dealers or manufacturers.

STATUS OF PRESENT AND PAST CONTRACTS

9) Give full information about past and present contracts, whether private or governmental contracts, whether prime or sub-contracts; whether completed or in progress or awarded but not yet begun; or whether you are low bidder pending award of contract.

OWNER	LOCATION	DESCRIPTION	ADJUSTED CONTRACT AMOUNT	AMOUNT COMPLETED AND BILLED	ADDITIONAL EARNED SINCE LAST ESTIMATE	BALANCE TO BE COMPLETED	ESTIMATED DATE OF COMPLETION

I CERTIFY THAT THE ABOVE INFORMATION IS CORRECT TO THE BEST OF MY KNOWLEDGE.

DATED:_____

_____
(Signature)

_____
(Name and Title)

_____
(Company Name)

_____
(Address)

_____
(City, State, Zip Code)

HOLD HARMLESS AGREEMENT

"To the fullest extent permitted by law, _____ (Name of Contractor/Vendor/Facility User) agrees to defend, pay on behalf of, indemnify, and hold harmless the Township of Piscataway, its elected and appointed officials, its agents, employees and volunteers and others working on behalf of the Township of Piscataway, against any and all claims, demands, suits, or loss including all costs connected therewith, and for any damages which may be asserted, claimed or recovered against or from the Township of Piscataway, its elected and appointed officials, its agents, employees, volunteers or others working on behalf of the Township of Piscataway, by reason of personal injury, including bodily injury or death and/or property damage, including loss of use thereof, which arises out of or is in any way connected for associated with this contract"

By:_____ Contractor/Vendor/Facility User

_____ Township Of Piscataway

_____
(Authorized Signature)

_____
(Printed Name of Above)

_____
(Address)

_____
(City, State, Zip)

_____
(Phone)

SAMPLE CERTIFICATE OF EMPLOYEE INFORMATION REPORT

TOWNSHIP OF PISCATAWAY

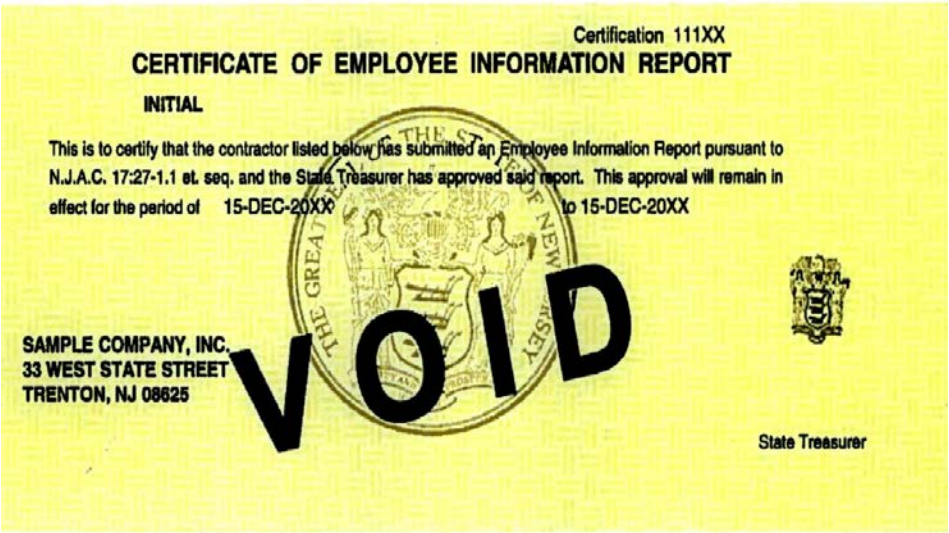

Certification 111XX

CERTIFICATE OF EMPLOYEE INFORMATION REPORT

INITIAL

This is to certify that the contractor listed below has submitted an Employee Information Report pursuant to N.J.A.C. 17:27-1.1 et. seq. and the State Treasurer has approved said report. This approval will remain in effect for the period of 15-DEC-20XX to 15-DEC-20XX

SAMPLE COMPANY, INC.
33 WEST STATE STREET
TRENTON, NJ 08625

VOID

State Treasurer

I have read this Bid in its entirety and hereby affirm that the Provider agrees to all terms and acknowledge as outlined in the instructions to bidders.

DATED:_____ _____
(Signature)

_____
(Name and Title)

_____
(Company Name)

_____
(Address)

_____
(City, State, Zip Code)

(Corporate Seal)

TOWNSHIP OF PISCATAWAY

REQUIRED FORMS:

BID BOND FORM
HOLD HARMLESS AGREEMENT
PLAN & EXPERIENCE
Play TO PLAY FORM

CERTIFICATION LAST PAGE

To be completed, signed and returned with Bid

TO All Bidders:

REMINDER!

Did you sign all of the bid documents?

All bid documents returned to the Township shall be signed with original signatures. Please use **blue ink.**

The Township will not accept facsimile or rubber stamp signatures.

Failure to sign and submit all bid documents may be cause for **disqualification and rejection of the bid**.

REQUIRE (1) One **"Original"** and **REQUIRED**: (1) One "**PHOTO Copy"** of the Original marked "**True Copy".**

Required: Cover Page, Name, Address, Phone Number, E-mail Address.

Return the REQUIRED DOCUMENTS in the original bid packet by the indicated deadline.

SAMPLE PAGES ARE NOT REQUIRED BACK WITH BID.

Bidders, Login to website for any addendums.

Website: **www.piscatawaynj.org** **(Click on Home Page, EGov, Bids)**

E-mail: purchasing@piscatawaynj.org

732-562-2321 (The Division of Purchasing)

.

Township of Piscataway

Appendix Section

PISCATAWAY PERFORMANCE FORM WILL ONLY BE ACCEPTABLE.

A. Model Performance Bond Form - *Sample*

B. Surety Disclosure Statement and Certification – *Sample*

C. PISCATAWAY BID BOND FORM INCLUDED IN THE BID REQUIRED DOCUMENTS. PISCATAWAY BID BOND FORM **WILL ONLY BE ACCEPTABLE.**

Bid No: 2022-01-02

THE TOWNSHIP OF PISCATAWAY

*THESE SAMPLE PAGES ARE **NOT** REQUIRED BACK WITH SEALED BID DOCUMENTS*

SAMPLE-BID REQUIRED DOCUMENTS ONCE AWARD

All documents in this section must be submitted with the awarded Contract –These documents are **REQUIRED ONCE AWARDED ONLY.**. Failure to submit the documents and other documents with the contract may be cause to reject the bid for being non-responsive.

MARIA E. VALENTE-CAEMMERER
Purchasing Agent/Township Secretary

TOWNSHIP OF PISCATAWAY

SAMPLE OF FORMS THAT WILL BE REQUIRED ONCE AWARDED

SAMPLE-AA-201
SAMPLE-AA-202
SAMPLE-AA-302
SAMPLE-W-9- May be submitted.
SAMPLE-INSURANCE CERTIFICATE
SAMPLE–ST-13 FORM
SAMPLE-PERFORMANCE BOND FORM.

THESE SAMPLE FORM DOES NOT HAVE TO BE RETURNED WITH BID DOCUMENTS.

TOWNSHIP WILL ONLY ACCEPT OUR DOCUMENTS:

PERFORMANCE BOND PAYMENTS FORM

Official Use Only

Assignment

Code

STATE OF NEW JERSEY

DEPARTMENT OF LABOR & WORKFORCE DEVELOPMENT
CONSTRUCTION EEO COMPLIANCE MONITORING PROGRAM

FORM AA-201
Revised 11/11

INITIAL PROJECT WORKFORCE REPORT CONSTRUCTION

For instructions on completing the form, go to: http://www.state.nj.us/treasury/contract_compliance/pdf/aa201ins.pdf

1. FID NUMBER

2. CONTRACTOR ID NUMBER

3. NAME AND ADDRESS OF PRIME CONTRACTOR

(Name)

(Street Address)

(City) (State) (Zip Code)

4. IS THIS COMPANY MINORITY OWNED [ ] OR WOMAN OWNED [ ]

5. NAME AND ADDRESS OF PUBLIC AGENCY AWARDING CONTRACT

Name:
Address:

CONTRACT NUMBER DATE OF AWARD DOLLAR AMOUNT OF AWARD

6. NAME AND ADDRESS OF PROJECT

Name:
Address:

COUNTY

7. PROJECT NUMBER

8. IS THIS PROJECT COVERED BY A PROJEC LABOR AGREEMENT (PLA)? YES

9. TRADE OR CRAFT	PROJECTED TOTAL EMPLOYEES				PROJECTED MINORITY EMPLOYEES				PROJECTED PHASE-IN DATE	PROJECTED COMPLETION DATE
	MALE		FEMALE		MALE		FEMALE			
	J	AP	J	AP	J	AP	J	AP		
1. ASBESTOS WORKER										
2. BRICKLAYER OR MASON										
3. CARPENTER										
4. ELECTRICIAN										
5. GLAZIER										
6. HVAC MECHANIC										
7. IRONWORKER										
8. OPERATING ENGINEER										
9. PAINTER										
10. PLUMBER										
11. ROOFER										
12. SHEET METAL WORKER										
13. SPRINKLER FITTER										
14. STEAMFITTER										
15. SURVEYOR										
16. TILER										
17. TRUCK DRIVER										
18. LABORER										
19. OTHER										
20. OTHER										

Sample -- AA201

I hereby certify that the foregoing statements made by me are true. I am aware that if any of the foregoing statements are willfully false, I am subject to punishment.

(Signature)

10. (Please Print Your Name) (Title)

(Area Code) (Telephone Number) (Ext.) (Date)

INSTRUCTIONS FOR COMPLETING THE INITIAL PROJECT WORKFORCE REPORT – CONSTRUCTION (AA201)

DO NOT COMPLETE THIS FORM FOR GOODS AND/OR SERVICE CONTRACTS

1. **Enter the Federal Identification Number assigned to the contractor by the Internal Revenue Service, or if a Federal Employer Identification Number has been applied for but not yet issued, or if your business is such that you have not or will not receive a Federal Identification Number, enter the social security number assigned to the single owner or one partner, in the case of a partnership.**

2. **Note: The Department of Labor & Workforce Development, Construction EEO Monitoring Program will assign a contractor ID number to your company. This number will be your permanently assigned contractor ID number that must be on all correspondence and reports submitted to this office.**

3. **Enter the prime contractor's name, address and zip code number.**

4. **Check box if Company is Minority Owned or Woman Owned**

5. **Enter the complete name and address of the Public Agency awarding the contract. Include the contract number, date of award and dollar amount of the contract.**

6. **Enter the name and address of the project, including the county in which the project is located.**

7. **Note: A project contract ID number will be assigned to your firm upon receipt of the completed Initial Project Workforce Report (AA201) for this contract. This number must be indicated on all correspondence and reports submitted to this office relating to this contract.**

8. **Check "Yes" or "No" to indicate whether a Project Labor Agreement (PLA) was established with the labor organization(s) for this project.**

9. **Under the Projected Total Number of Employees in each trade or craft and at each level of classification, enter the total composite workforce of the prime contractor and all subcontractors projected to work on the project. Under Projected Employees enter total minority and female employees of the prime contractor and all subcontractors projected to work on the project. Minority employees include Black, Hispanic, American Indian and Asian, (J=Journey worker, AP=Apprentice). Include projected phase-in and completion dates.**

10. **Print or type the name of the company official or authorized Equal Employment Opportunity (EEO) official include signature and title, phone number and date the report is submitted.**

This report must be submitted to the Public Agency that awards the contract and the Department of Labor & Workforce Development, Construction EEO Compliance Monitoring Program after notification of award, but prior to signing the contract.

THE CONTRACTOR IS TO RETAIN A COPY AND SUBMIT COPY TO THE PUBLIC AGENCY AWARDING THE CONTRACT AND FORWARD A COPY TO:

NEW JERSEY DEPARTMENT OF LABOR & WORKFORCE DEVELOPMENT
CONSTRUCTION EEO COMPLIANCE MONITORING UNIT
P.O. BOX 209
TRENTON, NJ 08625-0209
(609) 292-9550

SAMPLE

TO CONTRACTOR:

Have your bonding company complete the enclosed Performance/Payment Bond. In order to expedite the process by which your Performance/Payment Bond will be approved by our township attorney, you must use the enclosed form. Please fill out the numbered highlighted areas and have all required signatures in place. The Township will not review any alternative forms and they will be returned to you.

Please fill out the highlighted areas numbered as follows:

1. Full name of Contractor
2. Indicate whether a Corporation, Partnership or Individual

3, 3A, 3B Full name of Bonding Company, State, and Office Address

4. Amount of contract in words and figures
5. Date of Bond (Supplied by bonding company - cannot be prior to date of contract)
6. Date of Contract (Found on first page of contract at top)
7. Title and/or description of contract
8. Full name of Contractor
9. Full name of Contractor
10. Same date as Item # 5

SAMPLE

Accompanying documents from the bonding company must include the following:

1. Financial Statement
2. Surety Disclosure Statement and Certification

- A Power of Attorney should be provided for the individual executing the bond on behalf of the surety.

PERFORMANCE PAYMENT BOND MUST BE SIGNED AND SEALED BY ALL PARTIES INDICATED ON PAGE 2

SAMPLE

PERFORMANCE PAYMENT BOND

Know all men by these presents, that we, **(1)** _____ a **(2)** _____ the undersigned as Principal and **(3)** _____ of the State of **(3A)** _____ duly authorized to do business in the State of New Jersey, having an office at **(3B)**_____, New Jersey, as Surety, are hereby held and firmly bound unto the Township of Piscataway, 455 Hoes Lane, Piscataway, New Jersey 08854 in the penal sum of

(4) _____

($_____) DOLLARS,

for the payment of which well and truly to be made, we hereby jointly and severally bind ourselves, our heirs, executors, administrators, successors and assigns.

(5) Signed this_____ day of _____ 20____.

The condition of the above obligation is such that whereas, the above named principal did on the **(6)** _____ day of _____ 20____, enter into a contract with the Township of Piscataway, 455 Hoes Lane, Piscataway, New Jersey 08854 for

(7) _____

_____

_____

which said contract is made a part of this the bond the same as though set forth herein;

Now, if the said **(8)** _____ shall well and faithfully do and perform the things agreed by **(9)** _____ to be done and performed according to the terms of said contract, and shall pay all lawful claims of beneficiaries as defined by N.J.S. 2A:44-143 for labor performed or materials, provisions, provender or other supplies or teams, fuels, oils, implements or machinery furnished, used or consumed in the carrying forward, performing or completing of said contract, we agreeing and assenting that this undertaking shall be for the benefit of any beneficiary as defined in N.J.S. 2A: 44-143 having a just claim, as well as for the oblige herein; then this obligation shall be void; otherwise the same shall remain in full force and effect; it being expressly understood and agreed that the liability of the surety for any and all claims hereunder shall in no event exceed the penal amount of this obligation as herein stated.

The said surety hereby stipulates and agrees that no modifications, omissions or additions in or to the terms of the said contract or in or to the plans or specifications therefore shall in anywise affect the obligation of said surety on its bond.

Recovery of any claimant under the bond shall be subject to the conditions and provisions of this article to the same extent as if such conditions and provisions were fully incorporated in the form set forth above.

SAMPLE

SAMPLE

This bond shall not be subject to cancellation either by the principal or by the surety for any reason until such time as all improvements subject to the bond have been accepted by the municipality.

This bond shall be deemed continuous in form and shall remain in full force and effect until the improvements are accepted by the municipality and the bond is released, or until default is declared, or until the bond is replaced by another bond meeting applicable legal requirements. Upon approval or acceptance of all improvements by the municipality, or upon replacement of this bond by another bond, liability under this bond shall cease.

The aggregate liability of the surety shall not exceed the sum set forth above.

In the event that the improvements subject to this bond are not completed within the time allowed under the contract or bid documents (hereinafter the "Contract") between principal and municipality, the municipal governing body may, at its option, and upon at least 30 days prior written notice to the principal and to the surety by personal delivery or by certified or registered mail or courier, declare the principal to be in default and, in the event that the surety fails or refuses to complete the work in accordance with the terms and conditions of said Contract, claim payment under this bond for the cost of completion of the work. In the event that any action is brought against the principal under this bond, written notice of such action shall be given to the surety by the municipality by personal delivery or by registered or certified mail or courier at the same time.

SAMPLE

The surety shall have the right to complete the work in accordance with the terms and conditions of said Contract, either with its own employees or in conjunction with the principal or another contractor; provided, however, that the surety in its sole discretion, may make a monetary settlement with the municipality as an alternative to completing the work.

This bond shall insure to the benefit of the municipality only and no other party shall acquire any rights hereunder.

In the event that this bond shall for any reason cease to be effective prior to the approval or acceptance of all improvements, a cease and desist order may be issued by the governing body, in which case all work shall stop until such time as a replacement guarantee acceptable to municipality becomes effective.

SAMPLE

IN WITNESS WHEREOF , this instrument is executed in two (2) counterparts each of which shall be deemed an original , this the **(10)** _____ day of _____ , 20 ____

Attest :

_____
Principal

_____
(Typed or Printed)

_____
Principal Secretary

By:_____ (s)

_____
(Typed or Printed)

_____
Address

SEAL :

_____
Witness to Principal

SAMPLE

****

Attest :

_____
Surety

_____
Surety Secretary

By:_____ (s)
Attorney-in-fact

SEAL :

_____
Address

_____
Witness as to Surety

_____
Address

SAMPLE

CONTRACTOR INSURANCE REQUIREMENTS

Contractors
When the municipality lets work to a contractor, it is expected and required the contractor provide the municipality with the following minimum amount of insurance.

a) **Small Service and Repair Contractors**

- General Liability, including Products/Completed
- Operations – Limit $500,000 CSL
- Authority to be named as additional insured
- Auto Liability: Limit $500,000 CSL
- Coverage to include "Non-Owned and Hired Automobiles"
- Workers' Compensation Insurance – statutory limits

b) **Larger Contractors** (Includes contractors that are doing new construction or major alterations):

Requirements are same as above with exception of limits which are to be $ 1 Million CSL for both General and Automobile Liability.

Note: No work shall be allowed to begin without property Insurance Certificates on file with the member municipality and approved by the Insurance producer. Also, refer back to Item #9 in the underwriting section of the Policies and Procedures Manual for Insurance requirements for pyrotechnic contractors.

ADDITIONAL INSURED

The Township of Piscataway must be named additional Insured.
The description of the Goods & Services must be listed.

SAMPLE CERTIFICATE OF INSURANCE

ACORD®

CERTIFICATE OF LIABILITY INSURANCE

DATE (MM/DD/YYYY)

PRODUCER

Applicants Insurance Company Name and Address

THIS CERTIFICATION IS ISSUED AS A MATTER OF INFORMATION ONLY AND CONFERS NO RIGHTS UPON THE CERTIFICATE HOLDER. THIS CERTIFICATE DOES NOT AMEND, EXTEND OR ALTER THE COVERAGE AFFORDED BY THE POLICIES BELOW.

INSURERS AFFORDING COVERAGE	NAIC #
INSURER A:	
INSURER B:	
INSURER C:	
INSURER D:	
INSURER E:	

INSURED

Applicants Company Name and Address

COVERAGES

THE POLICIES OF INSURANCE LISTED BELOW HAVE BEEN ISSUED TO THE INSURED NAMED ABOVE FOR THE POLICY PERIOD INDICATED. NOTWITHSTANDING ANY REQUIREMENT, TERM OR CONDITION OF ANY CONTRACT OR OTHER DOCUMENT WITH RESPECT TO WHICH THIS CERTIFICATE MAY BE ISSUED OR MAY PERTAIN, THE INSURANCE AFFORDED BY THE POLICIES DESCRIBED HEREIN IS SUBJECT TO ALL THE TERMS, EXCLUSIONS AND CONDITIONS OF SUCH POLICIES. AGGREGATE LIMITS SHOWN MAY HAVE BEEN REDUCED BY PAID CLAIMS.

INSR LTR	ADDL INSRD	TYPE OF INSURANCE	POLICY NUMBER	POLICY EFFECTIVE DATE (MM/DD/YY)	POLICY EXPIRATION DATE (MM/DD/YY)	LIMITS	
		GENERAL LIABILITY COMMERCIAL GENERAL LIABILITY CLAIMS MADE / OCCUR GEN'L AGGREGATE LIMIT APPLIES PER: POLICY / PRO-JECT / LOC	Policy Number	Term		EACH OCCURRENCE	$ $1,000,000
						DAMAGE TO RENTED PREMISES (Ea occurrence)	$
						MED EXP (Any one person)	$
						PERSONAL & ADV INJURY	$
						GENERAL AGGREGATE	$
						PRODUCTS - COMP/OP AGG	$
							$
		AUTOMOBILE LIABILITY ANY AUTO ALL OWNED AUTOS SCHEDULED AUTOS HIRED AUTOS NON-OWNED AUTOS	Policy Number	Term		COMBINED SINGLE LIMIT (Ea accident)	$ $1,000,000
						BODILY INJURY (Per person)	$
						BODILY INJURY (Per accident)	$
						PROPERTY DAMAGE (Per accident)	$
		GARAGE LIABILITY ANY AUTO				AUTO ONLY - EA ACCIDENT	$
						OTHER THAN AUTO ONLY: EA ACC	$
						AGG	$
		EXCESS/UMBRELLA LIABILITY OCCUR / CLAIMS MADE DEDUCTIBLE RETENTION $	Policy Number	Term		EACH OCCURRENCE	$ $2,000,000
						AGGREGATE	$
							$
							$
							$
		WORKERS COMPENSATION AND EMPLOYERS' LIABILITY ANY PROPRIETOR/PARTNER/EXECUTIVE OFFICER/MEMBER EXCLUDED? If yes, describe under SPECIAL PROVISIONS below	Policy Number If applicable	Term		WC STATU-TORY LIMITS / OTH-ER	
						E.L. EACH ACCIDENT	$ $100,000
						E.L. DISEASE - EA EMPLOYEE	$ $100,000
						E.L. DISEASE - POLICY LIMIT	$ $500,000
		OTHER					

SAMPLE

DESCRIPTION OF OPERATIONS / LOCATIONS / VEHICLES / EXCLUSIONS ADDED BY ENDORSEMENT / SPECIAL PROVISIONS

Leave Blank **NAME OF PROJECT AND LOCATION**

CERTIFICATE HOLDER

ATTN:
TOWSHIP OF PISCATAWAY
455 HOES LANE
PISCATAWAY,NJ 08854

CANCELLATION

SHOULD ANY OF THE ABOVE DESCRIBED POLICIES BE CANCELLED BEFORE THE EXPIRATION DATE THEREOF, THE ISSUING INSURER WILL ENDEAVOR TO MAIL _____ DAYS WRITTEN NOTICE TO THE CERTIFICATE HOLDER NAMED TO THE LEFT, BUT FAILURE TO DO SO SHALL IMPOSE NO OBLIGATION OR LIABILITY OF ANY KIND UPON THE INSURER, ITS AGENTS OR REPRESENTATIVES.

AUTHORIZED REPRESENTATIVE

ACORD 25 (2001/08) © ACORD CORPORATION 1988

SAMPLE

TAXPAYER IDENTIFICATION

Form **W-9**
(Rev. November 2017)
Department of the Treasury
Internal Revenue Service

Request for Taxpayer Identification Number and Certification

▶ Go to *www.irs.gov/FormW9* for instructions and the latest information.

Give Form to the requester. Do not send to the IRS.

Print or type. See Specific Instructions on page 3.

1 Name (as shown on your income tax return). Name is required on this line; do not leave this line blank.

2 Business name/disregarded entity name, if different from above

3 Check appropriate box for federal tax classification of the person whose name is entered on line 1. Check only **one** of the following seven boxes.

☐ Individual/sole proprietor or single-member LLC ☐ C Corporation ☐ S Corporation ☐ Partnership ☐ Trust/estate

☐ Limited liability company. Enter the tax classification (C=C corporation, S=S corporation, P=Partnership) ▶ _____

Note: Check the appropriate box in the line above for the tax classification of the single-member owner. Do not check LLC if the LLC is classified as a single-member LLC that is disregarded from the owner unless the owner of the LLC is another LLC that is **not** disregarded from the owner for U.S. federal tax purposes. Otherwise, a single-member LLC that is disregarded from the owner should check the appropriate box for the tax classification of its owner.

☐ Other (see instructions) ▶

4 Exemptions (codes apply only to certain entities, not individuals; see instructions on page 3):

Exempt payee code (if any) _____

Exemption from FATCA reporting code (if any) _____

(Applies to accounts maintained outside the U.S.)

5 Address (number, street, and apt. or suite no.) See instructions.

Requester's name and address (optional)

6 City, state, and ZIP code

7 List account number(s) here (optional)

Part I **Taxpayer Identification Number (TIN)**

Enter your TIN in the appropriate box. The TIN provided must match the name given on line 1 to avoid backup withholding. For individuals, this is generally your social security number (SSN). However, for a resident alien, sole proprietor, or disregarded entity, see the instructions for Part I, later. For other entities, it is your employer identification number (EIN). If you do not have a number, see *How to get a TIN*, later.

Note: If the account is in more than one name, see the instructions for line 1. Also see *What Name and Number To Give the Requester* for guidelines on whose number to enter.

Social security number

☐☐☐ – ☐☐ – ☐☐☐☐

or

Employer identification number

☐☐ – ☐☐☐☐☐☐☐

Part II **Certification**

Under penalties of perjury, I certify that:

1. The number shown on this form is my correct taxpayer identification number (or I am waiting for a number to be issued to me); and
2. I am not subject to backup withholding because: (a) I am exempt from backup withholding, or (b) I have not been notified by the Internal Revenue Service (IRS) that I am subject to backup withholding as a result of a failure to report all interest or dividends, or (c) the IRS has notified me that I am no longer subject to backup withholding; and
3. I am a U.S. citizen or other U.S. person (defined below); and
4. The FATCA code(s) entered on this form (if any) indicating that I am exempt from FATCA reporting is correct.

Certification instructions. You must cross out item 2 above if you have been notified by the IRS that you are currently subject to backup withholding because you have failed to report all interest and dividends on your tax return. For real estate transactions, item 2 does not apply. For mortgage interest paid, acquisition or abandonment of secured property, cancellation of debt, contributions to an individual retirement arrangement (IRA), and generally, payments other than interest and dividends, you are not required to sign the certification, but you must provide your correct TIN. See the instructions for Part II, later.

Sign Here **Signature of U.S. person ▶** **Date ▶**

General Instructions

Section references are to the Internal Revenue Code unless otherwise noted.

Future developments. For the latest information about developments related to Form W-9 and its instructions, such as legislation enacted after they were published, go to *www.irs.gov/FormW9.*

Purpose of Form

An individual or entity (Form W-9 requester) who is required to file an information return with the IRS must obtain your correct taxpayer identification number (TIN) which may be your social security number (SSN), individual taxpayer identification number (ITIN), adoption taxpayer identification number (ATIN), or employer identification number (EIN), to report on an information return the amount paid to you, or other amount reportable on an information return. Examples of information returns include, but are not limited to, the following.

- Form 1099-INT (interest earned or paid)
- Form 1099-DIV (dividends, including those from stocks or mutual funds)
- Form 1099-MISC (various types of income, prizes, awards, or gross proceeds)
- Form 1099-B (stock or mutual fund sales and certain other transactions by brokers)
- Form 1099-S (proceeds from real estate transactions)
- Form 1099-K (merchant card and third party network transactions)
- Form 1098 (home mortgage interest), 1098-E (student loan interest), 1098-T (tuition)
- Form 1099-C (canceled debt)
- Form 1099-A (acquisition or abandonment of secured property)

Use Form W-9 only if you are a U.S. person (including a resident alien), to provide your correct TIN.

If you do not return Form W-9 to the requester with a TIN, you might be subject to backup withholding. See What is backup withholding, *later.*

ST-13 (4-08, R-8)

SAMPLE

State of New Jersey
DIVISION OF TAXATION
SALES TAX

To be completed by contractor and retained by seller.

FORM ST-13

CONTRACTOR'S NEW JERSEY TAX REGISTRATION NUMBER

CONTRACTOR'S EXEMPT PURCHASE CERTIFICATE

TO: _____ _____
(Name of Seller) (Date)

_____
(Address of Seller)

_____

The materials, supplies, or services purchased by the undersigned are for exclusive use in erecting structures, or building on, or otherwise improving, altering or repairing real property of the exempt organization, governmental entity, or qualified housing sponsor named below and are exempt from Sales and Use Tax under N.J.S.A. 54:32B-8.22.

THIS CONTRACT COVERS WORK TO BE PERFORMED FOR: (Check one)

☐ EXEMPT ORGANIZATION

Name of Exempt Organization . . . . . _____

Address . . . . . _____

Exempt Organization Number . . . . . _____

☒ NEW JERSEY OR FEDERAL GOVERNMENTAL ENTITY

Name of Governmental Entity . . . . . TOWNSHIP OF PISCATAWAY

Address of Governmental Entity . . . . . 455 HOES LANE, PISCATAWAY, NJ 08854

☐ QUALIFIED HOUSING SPONSOR

Name of Qualified Housing Sponsor . . . . _____

Address of Qualified Housing Sponsor . . _____

ADDRESS OR LOCATION OF CONTRACT WORK SITE: (property must be owned or leased by one of the above)

455 HOES LANE , PISCATAWAY, NJ 08854

I, the undersigned contractor, hereby verify and affirm that all of the information shown on this certificate is true.

SAMPLE

_____
Name of Contractor as registered with the New Jersey Division of Taxation

_____
Address of Contractor

_____
Signature of Contractor or Authorized Employee

See INSTRUCTIONS on reverse side.

MAY BE REPRODUCED
(Front & Back Required)

SAMPLE

INSTRUCTIONS TO SELLERS CONCERNING CONTRACTOR'S EXEMPT PURCHASE CERTIFICATES - ST-13

1. **Good Faith-** To act in good faith means to act in accordance with standards of honesty. In general, registered sellers who accept exemption certificates in good faith are relieved of liability for the collection and payment of sales tax on the transactions covered by the exemption certificate.

   In order for good faith to be established, the following conditions must be met:

   (a) Certificate must contain no statement or entry which the seller knows is false or misleading;

   (b) Certificate must be an official form or a proper and substantive reproduction, including electronic;

   (c) Certificate must be filled out completely;

   (d) Certificate must be dated and include the purchaser's New Jersey tax identification number or, for a purchaser that is not registered in New Jersey, the Federal employer identification number or out-of-State registration number. Individual purchasers must include their driver's license number; and

   (e) Certificate or required data must be provided within 90 days of the sale.

   The seller may, therefore, accept this certificate in good faith as a basis for exempting sales to the signatory purchaser and is relieved of liability even if it is determined that the purchaser improperly claimed the exemption.

2. **Improper Certificate** - Sales transactions which are not supported by properly executed exemption certificates are deemed to be taxable retail sales. In this situation, the burden of proof that the tax was not required to be collected is upon the seller.

3. **Correction of Certificate** - In general, sellers have 90 days after the date of sale to obtain a corrected certificate where the original certificate lacked material information required to be set forth in said certificate or where such information is incorrectly stated.

4. **Additional Purchases by Same Purchaser** - This Certificate will serve to cover additional purchases by the same purchaser of the same general type of property or service. However, each subsequent sales slip or purchase invoice based on this Certificate must show the purchaser's name, address and Certificate of Authority Number for purpose of verification.

5. **Retention of Certificates** - Certificates must be retained by the seller for a period of not less than four years from the date of the last sale covered by the certificate. Certificates must be in the physical possession of the seller and available for inspection on or before the 90th day following the date of the transaction to which the certificate relates.

6. **Definitions:**

   "Contractor" - means any individual, partnership, corporation or other commercial entity engaged in any business involving erecting structures for others, or building on, or otherwise improving, altering, or repairing real property of others.

   "Exempt Organization" - is any organization which holds a valid exempt organization permit issued pursuant to the provisions of N.J.S.A. 54:32B-9(b) which has issued an ST-5 Exempt Organization Certificate to the contractor.

   "New Jersey or Federal Governmental Entity" - is any agency, instrumentality, political subdivision, authority, or public corporation of the governments of the United States of America or the State of New Jersey. Governmental agencies, instrumentalities or political subdivisions of states other than New Jersey do not qualify for exemption.

   "Qualified Housing Sponsor" - is any person, partnership, corporation or association certified by the New Jersey Housing and Mortgage Finance Agency to have obtained financing, in addition to federal, state or local government subsidies, for a housing project from the New Jersey Housing and Mortgage Finance Agency pursuant to N.J.S.A. 55:14K-1, et seq. and has issued a New Jersey Sales and Use Tax Housing Sponsor Letter of Exemption to the contractor.

PRIVATE REPRODUCTION of Contractor's Exempt Purchase Certificates may be made without the prior permission of the Division of Taxation.

FOR MORE INFORMATION:

Call the Customer Service Center (609) 292-6400. Send an e-mail to nj.taxation@treas.state.nj.us. Write to: New Jersey Division of Taxation, Information and Publications Branch, PO Box 281, Trenton, NJ 08695-0281.

SAMPLE

U.S. Department of Labor
Wage and Hour Division

PAYROLL

(For Contractor's Optional Use; See Instructions at www.dol.gov/whd/forms/wh347instr.htm)

Persons are not required to respond to the collection of information unless it displays a currently valid OMB control number.

U.S. Wage and Hour Division
Rev. Dec. 2008

OMB No.: 1235-0008
Expires: 01/31/2015

NAME OF CONTRACTOR ☐ OR SUBCONTRACTOR ☐	ADDRESS	
PAYROLL NO. / FOR WEEK ENDING	PROJECT AND LOCATION	PROJECT OR CONTRACT NO.

(1) NAME AND INDIVIDUAL IDENTIFYING NUMBER (e.g., LAST FOUR DIGITS OF SOCIAL SECURITY NUMBER) OF WORKER	(2) NO. OF WITHHOLDING EXEMPTIONS	(3) WORK CLASSIFICATION	OT. OR ST.	(4) DAY AND DATE / HOURS WORKED EACH DAY							(5) TOTAL HOURS	(6) RATE OF PAY	(7) GROSS AMOUNT EARNED	(8) DEDUCTIONS: FICA	WITH-HOLDING TAX			OTHER	TOTAL DEDUCTIONS	(9) NET WAGES PAID FOR WEEK
			O																	
			S																	
			O																	
			S																	
			O																	
			S																	
			O																	
			S																	
			O																	
			S																	
			O																	
			S																	
			O																	
			S																	
			O																	
			S																	

SAMPLE

While completion of Form WH-347 is optional, it is mandatory for covered contractors and subcontractors performing work on Federally financed or assisted construction contracts to respond to the information collection contained in 29 C.F.R. §§ 3.3, 5.5(a). The Copeland Act (40 U.S.C. § 3145) contractors and subcontractors performing work on Federally financed or assisted construction contracts to "furnish weekly a statement with respect to the wages paid each employee during the preceding week." U.S. Department of Labor (DOL) regulations at 29 C.F.R. § 5.5(a)(3)(ii) require contractors to submit weekly a copy of all payrolls to the Federal agency contracting for or financing the construction project, accompanied by a signed "Statement of Compliance" indicating that the payrolls are correct and complete and that each laborer or mechanic has been paid not less than the proper Davis-Bacon prevailing wage rate for the work performed. DOL and federal contracting agencies receiving this information review the information to determine that employees have received legally required wages and fringe benefits.

Public Burden Statement

We estimate that is will take an average of 55 minutes to complete this collection, including time for reviewing instructions, searching existing data sources, gathering and maintaining the data needed, and completing and reviewing the collection of information. If you have any comments regarding these estimates or any other aspect of this collection, including suggestions for reducing this burden, send them to the Administrator, Wage and Hour Division, U.S. Department of Labor, Room S3502, 200 Constitution Avenue, N.W. Washington, D.C. 20210

(over)

Date _____

I, _____ _____
(Name of Signatory Party) (Title)

do hereby state:

(1) That I pay or supervise the payment of the persons employed by

_____ on the
(Contractor or Subcontractor)

_____; that during the payroll period commencing on the
(Building or Work)

_____ day of _____, _____, and ending the _____ day of _____, _____,

all persons employed on said project have been paid the full weekly wages earned, that no rebates have been or will be made either directly or indirectly to or on behalf of said

_____ from the full
(Contractor or Subcontractor)

weekly wages earned by any person and that no deductions have been made either directly or indirectly from the full wages earned by any person, other than permissible deductions as defined in Regulations, Part 3 (29 C.F.R. Subtitle A), issued by the Secretary of La[illegible] the Copelan[illegible]t, as amen[illegible] (48 Stat. 94[illegible] 63 Start. 108, 72 Stat. 967; 76 Stat. 357; 40 U.S.C. [illegible]145), an[illegible]escribed [illegible]

_____

_____

_____

_____

SAMPLE

(2) That any payrolls otherwise under this contract required to be submitted for the above period are correct and complete; that the wage rates for laborers or mechanics contained therein are not less than the applicable wage rates contained in any wage determination incorporated into the contract; that the classifications set forth therein for each laborer or mechanic conform with the work he performed.

(3) That any apprentices employed in the above period are duly registered in a bona fide apprenticeship program registered with a State apprenticeship agency recognized by the Bureau of Apprenticeship and Training, United States Department of Labor, or if no such recognized agency exists in a State, are registered with the Bureau of Apprenticeship and Training, United States Department of Labor.

(4) That:

(a) WHERE FRINGE BENEFITS ARE PAID TO APPROVED PLANS, FUNDS, OR PROGRAMS

☐ -- in addition to the basic hourly wage rates paid to each laborer or mechanic listed in the above referenced payroll, payments of fringe benefits as listed in the contract have been or will be made to appropriate programs for the benefit of such employees, except as noted in section 4(c) below.

(b) WHERE FRINGE BENEFITS ARE PAID IN CASH

☐ -- Each laborer or mechanic listed in the above referenced payroll has been paid, as indicated on the payroll, an amount not less than the sum of the applicable basic hourly wage rate plus the amount of the required fringe benefits as listed in the contract, except as noted in section 4(c) below.

(c) EXCEPTIONS

EXCEPTION (CRAFT)	EXPLANATION

REMARKS:

NAME AND TITLE	SIGNATURE

THE WILLFUL FALSIFICATION OF ANY OF THE ABOVE STATEMENTS MAY SUBJECT THE CONTRACTOR OR SUBCONTRACTOR TO CIVIL OR CRIMINAL PROSECUTION. SEE SECTION 1001 OF TITLE 18 AND SECTION 231 OF TITLE 31 OF THE UNITED STATES CODE.

SAMPLE

INSTRUCTIONS FOR COMPLETING MONTHLY PROJECT WORKFORCE REPORT- (AA202)

1. Enter the prime contractor's name, address and zip code number.

2. Enter the **CONTRACTOR ID NUMBER** assigned by the Dept. of Labor & Workforce Development Construction EEO Compliance Monitoring Program.

3. Enter the Federal Identification Number assigned to the contractor by the Internal Revenue Service, or if a Federal Employer Identification Number has not been applied for or issued, or if your business is such that it will not receive a Federal Identification Number, enter the Social Security Number of the owner or of one partner, in the case of a partnership.

4. Reporting Period - enter the beginning and ending dates of the month for the report being submitted. (i.e., 1/1/00 – 1/31/00).

5. Enter the complete name of the public agency awarding the contract. Include the date of contract award.

6. Enter the name and location of the project, including the county in which the project is located.

7. Enter the **PROJECT NUMBER** assigned by the Dept. of Labor & Workforce Development Construction EEO Compliance Monitoring Program.

8. Enter the company name(s) of the contractor(s) performing work at the construction site. List the prime contractor first with subcontractor(s) following.

9. Enter the total percent (%) of project work the contractor or subcontractor has completed, to date.

10. Identify the trades or crafts applicable to the prime contractor and each subcontractor listed in column #8. Use a single line for each trade or craft.

11. Enter the total number of employees for each contractor at each level of classification (J=Journeyworker, AP=Apprentice) and the total number of each minority group - Black, Hispanic, American Indian, Asian and Female. Note: Column A shall include Total Number of employees. Columns B-E shall also include minority females. Column F shall include both non-minority and minority females.

12. Enter the total number of minority employees for each employer at each level of classification. Note: This shall be the sum of columns B-E.

13. Enter the Total Monthly work hours for all employees in each craft at each level of classification.
    (A) Enter the Total Monthly minority work hours for each craft at each level of classification (Columns B-E).
    (B) Enter the Total Monthly female work hours for each craft at each level of classification (Column F).

14. (A) Enter the Total Monthly PERCENT of minority work hours for each craft at each level of classification.
    (B) Enter the Total Monthly PERCENT of female work hours for each craft at each level of classification.

15. Enter the Total Cumulative work hours for each craft at each level of classification.
    (A) Enter the Total Cumulative minority work hours for each craft at each level of classification.
    (B) Enter the Total Cumulative female work hours for each craft at each level of classification.

16. (A) Enter the Cumulative Percent of minority work hours for each craft at each level of classification.
    (B) Enter the Cumulative Percent of female work hours for each craft at each level of classification.

17. Print or type the name of the company official submitting the report; include signature, title, telephone number, and date the report is submitted.

THE CONTACTOR SHOULD RETAIN ONE COPY AND SUBMIT A COPY TO THE PUBLIC AGENCY WHICH AWARDED THE CONTRACT. ANOTHER COPY MUST BE FORWARDED TO:

New Jersey Department of Labor & Workforce Development
Construction EEO Compliance Monitoring Program
PO Box 209
Trenton, NJ 08625-0209
609 292-9550

FORM AA-202
REVISED 11/11

State Of New Jersey

Department of Labor & Workforce Development
Construction EEO Compliance Monitoring Program

MONTHLY PROJECT WORKFORCE REPORT - CONSTRUCTION

For instructions on completing the form, go to:
http://www.state.nj.us/treasury/contract_compliance/pdf/aa202ins.pdf

3. F ID or SS Number

1.Name and address of Prime Contractor

2. Contractor ID Number

4. Reporting Period

(NAME)

5. Public Agency Awarding Contract **Date of Award**

(ADDRESS)

6. Name and Location of Project **County**

7. Project ID Number

(CITY) (STATE) (ZIP CODE)

8. CONTRACTOR NAME (LIST PRIME CONTRACTOR WITH SUBS FOLLOWING)	9. PERCENT OF WORK COMPLETED	10. TRADE OR CRAFT	CLASSI-FICATION (SEE REVERSE)	11. NUMBER OF EMPLOYEES A. TOTAL	B. BLACK	C. HISPANIC	D. AMERICAN INDIAN	E. ASIAN	F. FEMALES	12. TOTAL NO. OF MIN. EMP.	13. WORK HOURS TOTAL WORK HOURS	A. MIN. W/H	B. FEMALE W/H	14. % OF WORK HRS A. % OF MIN. W/H	B. % OF FEMALE W/H	15. CUM. WORK HRS TOTAL WORK HOURS	A. MIN. HOURS	B. FEMALE HOURS	16. CUM. % OF W/H A. % OF MIN. W/H	B. % OF FEM. W/H
			J																	
			AP																	
			J																	
			AP																	
			J																	
			AP																	
			J																	
			AP																	
			J																	
			AP																	

SAMPLE

17. COMPLETED BY (PRINT OR TYPE)

(NAME) (SIGNATURE) (TITLE)

(AREA CODE) (TELEPHONE NUMBER) (EXT.) (DATE)

THE TOWNSHIP OF PISCATAWAY

LAST PAGE